Town of Greenville

154 SW Old Mission Avenue, PO Box 235, Greenville, Florida 32331

GREENVILLE WATER PLANT UPGRADES - CIVIL AND SITE IMPROVEMENTS

INVITATION TO NEGOTIATE

ITN NUMBER: 2026-05

MAXIMUM AWARD AMOUNT: $110,000.00

Reply Submission Deadline	
Day:	July
Date:	
Time:	
Location:	Greenville Town Hall
Address:	154 SW Old Mission Avenue, Greenville, Florida 32331

Prepared by:

Felicity Appel, P.E.
850-553-3537
felicity.appel@kimley-horn.com

1. NOTICE TO RESPONDENTS

The Town of Greenville, Florida (Town) invites sealed replies from qualified respondents for the project described in this Invitation to Negotiate (ITN). The Town intends to evaluate written replies, identify one or more respondents for negotiations, and negotiate the terms, scope, schedule, price, and other conditions that will provide the best value to the Town within available funding.

All communications concerning this solicitation must be directed to Felicity Appel, P.E., at (850) 553-3537 or felicity.appel@kimley-horn.com. Respondents must not contact Town Council members, other Town personnel, or the evaluation committee regarding this solicitation except through the designated point of contact.

2. PURPOSE AND PROJECT SCOPE

The Town seeks a qualified contractor to construct civil and site improvements at the Greenville Water Treatment Plant to support replacement of the existing filter system. The work includes mobilization, erosion and sedimentation controls, selective piping removal, construction of a reinforced concrete equipment pad, installation of yard piping, valves, fittings, service saddles, a wetwell penetration and flexible connection, unloading and anchoring the proposed filter system, removal and disposal of existing filter media, tank cleaning, media loading assistance, restoration, testing, and record drawings, as further described in the specifications and construction drawings.

The project is funded by the Florida Department of Agriculture and Consumer Services through the Florida Local Government Water and Wastewater Treatment Facility Energy Efficiency Program. The selected respondent must comply with all applicable federal, state, local, funding, and contract requirements included in this solicitation and its exhibits.

3. MAXIMUM AWARD AMOUNT

The maximum award amount available under this solicitation is **$110,000.00**. The Town may negotiate scope, quantities, alternates, schedule, price, or other terms to remain within available funding. The Town is not obligated to award the full amount and may reject any reply that cannot be negotiated within the available budget.

4. PROCUREMENT SCHEDULE

Milestone	Date / Time
ITN Advertisement	_____
Optional Pre-Proposal Conference / Site Visit	_____
Deadline for Written Questions	_____
Town Responses / Addendum	_____
Reply Submission Deadline	_____
Evaluation / Shortlisting	_____
Negotiations / Presentations, if requested	_____
Anticipated Notice of Intended Award	_____

The Town may revise the schedule by addendum. Respondents are responsible for monitoring issued addenda and incorporating them into their replies.

5. QUESTIONS, CLARIFICATIONS, AND ADDENDA

Questions must be submitted in writing by the deadline shown above. Oral interpretations are not binding. Any material clarification, revision, or response will be issued by written addendum. Each respondent must acknowledge all addenda in its reply.

6. SUBMISSION INSTRUCTIONS

Replies must be submitted in a sealed envelope and mailed or hand delivered to the address on the cover page by the stated deadline. Late replies will not be accepted. The outside of the envelope must identify the ITN number, project title, respondent name, and the words “SEALED REPLY.”

The reply must remain valid for at least sixty (60) days after the submission deadline and through any negotiation period unless the Town agrees otherwise in writing.

7. REQUIRED REPLY FORMAT

1. Executive Summary. Describe the proposed construction approach, major risks, assumptions, and the respondent's understanding of the project.

2. Technical and Construction Approach. Address sequencing, site logistics, piping work, concrete work, tank cleaning, filter unloading and anchoring, testing, restoration, safety, quality control, and coordination with the filter supplier and Town.

3. Project Team and Subcontractors. Identify the project manager, superintendent, key personnel, subcontractors, and licenses.

4. Schedule. Provide a detailed construction schedule showing submittals, procurement, mobilization, major work activities, testing, and final completion.

5. Qualifications and References. Provide comparable water-treatment, utility, piping, and concrete project experience and at least three references.

6. Price Proposal. Complete the incorporated unit-price bid schedule and identify alternates, assumptions, exclusions, and value-engineering options.

7. Bonding, Insurance, and Financial Capacity. Provide evidence of ability to furnish required bid security and post-award performance and payment bonds.

8. Exceptions and Negotiation Items. Identify requested deviations and proposed contract revisions.

9. Required Forms. Submit all certifications, disclosures, licensing documents, and funding forms required by the ITN and its exhibits.

8. MINIMUM RESPONSIVENESS REQUIREMENTS

- Proper Florida contractor licensing for the work performed.
- Ability to furnish required bid security and post-award performance and payment bonds.
- Demonstrated experience with utility construction, water-treatment facilities, concrete pads, and pressure piping.
- Ability to meet applicable safety, trench, testing, permitting, and funding requirements.
- Proposed price and negotiated final price must be within available funding unless the Town authorizes another lawful funding source.

A reply may be deemed nonresponsive if it omits material information, takes material exceptions without explanation, fails to acknowledge addenda, or does not meet mandatory licensing, bonding, insurance, technical, or funding requirements applicable to the project.

9. EVALUATION CRITERIA

A Town evaluation committee may review and score the written replies using the following criteria. The Town may verify information, request clarifications, contact references, and consider the respondent's responsibility, financial capacity, past performance, and ability to meet funding requirements.

Evaluation Criterion	Points
Technical approach, constructability, quality control, and risk management	25
Qualifications, comparable experience, and references	15
Project team, subcontractors, licensing, and capacity	10
Schedule and ability to meet the required completion period	15
Compliance with bonding, safety, funding, and contract requirements	10
Price, unit rates, value engineering, and overall value	25
Total	**100**

The Town may shortlist the highest-ranked respondents, but it is not required to negotiate with a fixed number of respondents. Written scoring is used to support selection for negotiations and does not create an entitlement to award.

10. ORAL PRESENTATIONS, INTERVIEWS, AND DEMONSTRATIONS

The Town may invite one or more respondents to participate in interviews, presentations, site discussions, product demonstrations, or other clarification sessions. Participation may be required as a condition of continued consideration. The Town may establish additional scoring or pass/fail requirements for these sessions by written notice.

11. NEGOTIATION PROCESS

The Town may begin negotiations with the highest-ranked respondent or with multiple shortlisted respondents, as determined to be in the Town's best interest. Negotiations may address any lawful aspect of the proposed agreement, including technical approach, equipment, materials, quantities, staffing, schedule, risk allocation, warranties, service levels, contract terms, and price.

The Town may request revised proposals, written clarifications, cost breakdowns, value-engineering options, alternate configurations, or best and final offers. The Town may discontinue negotiations with a respondent and begin or continue negotiations with another respondent when the Town determines that agreement is unlikely or that doing so is in the Town's best interest. No respondent has a right to exclusive negotiations.

No agreement is binding until approved by the Town and executed by authorized representatives. Discussions, rankings, notices, draft terms, or recommendations do not constitute an award or contract.

12. BEST AND FINAL OFFER

At the conclusion of negotiations, the Town may request a written best and final offer (BAFO). A BAFO must identify all negotiated changes and include final pricing and contract exceptions. If a respondent does not submit a timely BAFO, the Town may rely on the respondent's most recent written offer or discontinue negotiations.

13. SELECTION AND AWARD

The Town intends to select the respondent whose final negotiated offer provides the best value, considering the evaluation criteria, negotiations, technical merit, price, schedule, funding requirements, risk, and the Town's operational needs. Award is not required to be made to the lowest-priced respondent.

The Town may make an award in whole or in part, award by item or alternate, reduce quantities, reject all replies, cancel or reissue the solicitation, or make no award if funding, negotiations, or project conditions do not support an award.

14. RESERVATION OF RIGHTS

- Reject any or all replies, with or without cause.
- Waive minor irregularities or informalities when permitted by law.
- Request clarification or additional information from any respondent.
- Conduct independent investigations of qualifications, references, responsibility, and financial capacity.
- Modify the scope, quantities, schedule, or contract terms through negotiation.
- Negotiate with one or more respondents simultaneously or sequentially.
- Terminate negotiations at any time and proceed with another respondent.
- Accept the reply or negotiated offer that the Town determines best serves the public interest.

15. PUBLIC RECORDS AND CONFIDENTIAL INFORMATION

Replies and related records will be handled in accordance with applicable Florida public records law. A respondent claiming that specific information is exempt from disclosure must clearly identify the information and the legal basis for the claimed exemption. The Town does not guarantee that information marked confidential will be exempt from disclosure.

16. CONFLICTS, NON-COLLUSION, AND ETHICS

Respondents must disclose actual or potential conflicts of interest and must not engage in collusion, price fixing, or improper communications. The Non-Collusion Affidavit and Required Disclosure included in this solicitation must be completed and submitted.

17. CONTRACT TERMS AND FUNDING CONDITIONS

The selected respondent must execute the Town's agreement or accept an authorized purchase order, as applicable. The Town may incorporate the selected reply, negotiated terms, BAFO, addenda, funding provisions, technical specifications, drawings, and required forms into the final agreement. Payment is subject to satisfactory performance, available funding, and compliance with all applicable requirements.

18. INTERPRETATION OF INCORPORATED EXHIBITS

The technical specifications, drawings, funding documents, bond forms, and other exhibits from the prior draft solicitation are incorporated into this ITN except as expressly revised herein. In incorporated exhibits, references to "Invitation to Bid," "ITB," "bid," "bidder," "bid price," or similar competitive-sealed-bid terminology will be interpreted as "Invitation to Negotiate," "ITN," "reply," "respondent," "proposed price," or equivalent ITN terminology, as the context requires. If a conflict exists, the ITN front-end provisions and any later addendum control.

19. PROJECT-SPECIFIC CONTRACT REQUIREMENTS

- Target final completion is sixty-five (65) consecutive calendar days from the Notice to Proceed, subject to negotiation.
- The final agreement may include liquidated damages of $200 per day for unexcused delay.
- A five percent (5%) bid security may be required with the reply, as stated in the incorporated forms or any addendum.
- The selected contractor must furnish performance and payment bonds in the amount required by the final agreement and applicable law.
- All applicable licenses, permits, safety plans, testing, insurance, and record-document requirements remain in effect.

ATTACHMENT A - REPLY CERTIFICATION AND PRICE PROPOSAL

The undersigned respondent proposes to provide the equipment, materials, construction, and/or related services described in this ITN and its exhibits. The respondent acknowledges that price is one factor in a best-value negotiation and that the Town may negotiate scope, quantities, alternates, schedule, and terms before award.

MAXIMUM AWARD AMOUNT: $110,000.00

Proposed Total Price	$_____
Amount in Words	_____
Proposed Completion / Delivery Period	_____ calendar days
Price Valid Through	_____

Price Breakdown / Schedule of Values: Complete the project-specific price sheet and pay-item schedule contained in the incorporated solicitation exhibits. Clearly identify proposed alternates, exclusions, assumptions, and cost-saving options.

Exceptions: List all exceptions to the ITN, technical specifications, drawings, funding provisions, and proposed contract. Silence will be interpreted as acceptance of the requirements, subject to negotiation.

_____

_____

_____

RESPONDENT INFORMATION AND CERTIFICATION

Legal Business Name	_____
Address	_____
City / State / ZIP	_____
Contact Name	_____
Telephone	_____
Email	_____
Federal ID No.	_____
Authorized Signature	_____
Printed Name and Title	_____
Date	_____

By signing, the respondent certifies that the reply is genuine, the respondent is authorized to submit it, the respondent has reviewed the solicitation, and the information provided is true and complete to the best of the signer's knowledge.

ACKNOWLEDGEMENT OF ADDENDA

Addendum No.	Date	Addendum No.	Date
_____	_____	_____	_____
_____	_____	_____	_____
_____	_____	_____	_____

REQUIRED FORMS CHECKLIST

[ ] Reply Certification and Price Proposal

[ ] Completed unit-price schedule

[ ] Florida contractor license information

[ ] Subcontractor and supplier list

[ ] Acknowledgement of Addenda

[ ] Non-Collusion Affidavit

[ ] Required Disclosure

[ ] Trench Safety Act Form

[ ] Drug-Free Workplace Form

[ ] Bid Security, if required

[ ] Evidence of bonding capacity

[ ] Current W-9

NON-COLLUSION AFFIDAVIT

The undersigned, being duly sworn, states that this reply is genuine and not collusive or a sham; that the respondent has not conspired, agreed, or communicated with another person or entity to fix prices, restrict competition, submit a sham reply, or refrain from responding; and that no improper payment, promise, or benefit has been offered to influence this solicitation.

Entity: _____

Affiant Signature: _____

Printed Name and Title: _____

Date: _____

Notary Public: _____

Commission Information: _____

Personally Known or ID Produced: _____

REQUIRED DISCLOSURE

Disclose all material facts concerning any felony or civil conviction, pending felony or civil charge, debarment, suspension, contract termination for default, or similar matter during the last three (3) years involving the respondent, a related or affiliated entity, or a present or former executive employee, officer, director, partner, or owner whose involvement is material to this reply.

_____

Pay Item No.	Pay Item Description	Units	Qty.	Unit Cost	TOTAL
1	Mobilization (5% Max)	LS	1		
2	Temporary Erosion, Sedimentation, and Water Pollution Control	LS	1		
3	Removal of Approximately 20 LF of Underground PVC Raw Water Piping	EA	20		
4	Removal of Approximately 40 LF of Aboveground PVC Bypass Piping	EA	40		
5	Construct 40 ft x 13.5 ft Reinforced Cast-In-Place Concrete Equipment Pad, Including Reinforcement Materials, Excavation, Grading, and Compacted Base	CY	16		
6	Furnish and Install 6-inch AWWA C900 DR-18 PVC Mechanical Joint (MJ) Yard Piping	LF	265		
7	Furnish and Install 8-inch AWWA C900 DR-18 PVC MJ Yard Piping	LF	55		
8	Furnish and Install 1.5-inch Schedule 80 PVC Drain Piping, Including Two (2) 1.5-Inch Double-Strap Stainless Steel Service Saddles With Threaded Outlets for Connection to 8-Inch PVC Drain Line	LF	10		
9	6-Inch Ductile Iron (DI) 90-Degree Elbow Fittings (MJ)	EA	13		
10	6-Inch DI 45-Degree Elbow Fittings (MJ)	EA	2		
11	8-Inch DI 45-Degree Elbow Fittings (MJ)	EA	1		
12	8-Inch x 6-Inch DI Reducer (MJ)	EA	1		
13	6-inch x 6-inch x 6-inch DI Tee (MJ)	EA	1		
14	8-inch x 8-inch x 6-inch DI Tee (MJ)	EA	1		
15	6-inch Resilient Seated Gate Valve	EA	1		

16	6-inch AWWA C517 Eccentric Plug Valve MJ (Full Port) With Manual Worm Gear Operator for Throttling	EA	1		
17	6-Inch McCrometer Flowmeter OR Approved Equal	EA	1		
18	Core Drill Penetration Through Existing Backwash Pump Station Wetwell and Flexible Pipe-To-Structure Connection (Kor-n-Seal) for 8-inch Pipe (Sized for Pipe O.D. & Wall Thickness)	EA	1		
19	Unloading of the Filter System Delivered to the Site by the Supplier	LS	1		
20	Furnish and Install Material to Anchor Filter System to the Concrete Pad and Complete Anchoring	LS	1		
21	Removal and Disposal of Media from Existing Filter Tank and Flushing / Cleaning Tank	CF	1850		
22	Washing and Media Loading for Proposed Filter Tank with Supplier Assistance	LS	1		
23	Seed & Mulch (For Restoration in Yard Piping Installation Areas and around the Concrete Pad Perimeter)	SY	220		
24	Piping Pressure and Bac-Testing and Record Drawings	LS	1		
				TOTAL BID PRICE	

EXHIBIT A

SPECIFICATIONS

FOR

WATER PLANT UPGRADES

TOWN OF GREENVILLE, FLORIDA

MAY 2026

Prepared for:

Prepared by:

Kimley»Horn

Expect More. Experience Better.

DIVISION 00 – CONTRACTING REQUIREMENTS

00 C-610	PERFORMANCE BOND
00 c-615	PAYMENT BOND
00 70 00	STANDARD GENERAL CONDITIONS

DIVISION 01—GENERAL REQUIREMENTS

01 0 050	GENERAL REQUIREMENTS
01 03 00	SPECIAL PROJECT PROCEDURES
01 04 70	MODIFICATIONS TO EXISTING STRUCTURES, PIPING AND EQUIPMENT
01 10 00	SUMMARY OF WORK
01 22 13	MEASUREMENT AND PAYMENT
01 25 00	SUBSTITUTION PROCEDURES
01 32 16	CONSTRUCTION PROGRESS SCHEDULE
01 32 33	PRECONSTRUCTION PHOTOGRAPHS AND VIDEO
01 33 00	SUBMITTALS
01 45 23	TESTING AND INSPECTION SERVICES
01 50 00	TEMPORARY FACILITIES AND CONTROLS
01 53 00	PROTECTION OF EXISTING FACILITIES
01 60 00	PRODUCT REQUIREMENTS
01 66 00	PRODUCT DELIVERY, STORAGE, AND HANDLING REQUIREMENTS
01 70 00	MOBILIZATION AND DEMOBILIZATION
01 71 23	CONSTRUCTION STAKING AND LAYOUT AND RECORD SURVEY
01 74 23	CLEANING
01 77 19	CLOSEOUT REQUIREMENTS
01 78 00	WARRANTIES AND BONDS

01 78 39 PROJECT RECORD DOCUMENTS

DIVISION 02 – EXISTING CONDITIONS

02 41 14 SELECTIVE UTILITY REMOVAL / DEMOLITION

DIVISION 03 – CONCRETE

03 10 00 CONCRETE FORMWORK

03 20 00 CONCRETE REINFORCEMENT

03 25 00 CONCRETE JOINTS AND JOINT ACCESSORIES

03 30 00 CAST-IN-PLACE CONCRETE

DIVISION 09 - FINISHES

09 90 00 PAINTING AND COATINGS

09 90 01 PIPING COLOR CODING AND LABELING

DIVISION 31—EARTHWORK

31 25 00 EROSION AND SEDIMENTATION CONTROLS

DIVISION 32—EXTERIOR IMPROVEMENTS

32 92 00 SEDDING AND SODDING

DIVISION 33—UTILITIES

33 04 45 PRESSURE TESTING OF PIPING

33 05 10 UTILITY TRENCH EXCAVATION, EMBEDMENT, AND BACKFILL

33 05 97 IDENTIFICATION AND SIGNAGE FOR UTILITIES

33 31 11 DUCTILE IRON FITTINGS

33 11 12 POLYVINYL CHLORIDE (PVC) PRESSURE PIPING

33 31 20 POLYVINYL CHLORIDE (PVC) GRAVITY SANITARY SEWER PIPE

PERFORMANCE BOND

Prepared By

EJCDC® C-610, Performance Bond.
Copyright© 2018 National Society of Professional Engineers, American Council of Engineering Companies, and American Society of Civil Engineers. All rights reserved.

Copyright© 2018

National Society of Professional Engineers

1420 King Street, Alexandria, VA 22314-2794

(703) 684-2882

www.nspe.org

American Council of Engineering Companies

1015 15th Street N.W., Washington, DC 20005

(202) 347-7474

www.acec.org

American Society of Civil Engineers

1801 Alexander Bell Drive, Reston, VA 20191-4400

(800) 548-2723

www.asce.org

The copyright for this EJCDC document is owned jointly by the three sponsoring organizations listed above. The National Society of Professional Engineers is the Copyright Administrator for the EJCDC documents; please direct all inquiries regarding EJCDC copyrights to NSPE.

NOTE: EJCDC publications may be purchased at www.ejcdc.org, or from any of the sponsoring organizations above.

PERFORMANCE BOND

Contractor Name: Address *(principal place of business)*:	**Surety** Name: Address *(principal place of business)*:
Owner Name: Mailing address *(principal place of business)*:	**Contract** Description *(name and location)*: Contract Price: Effective Date of Contract:
Bond Bond Amount: Date of Bond: *(Date of Bond cannot be earlier than Effective Date of Contract)* Modifications to this Bond form: ☐ None ☐ See Paragraph 16	
Surety and Contractor, intending to be legally bound hereby, subject to the terms set forth in this Performance Bond, do each cause this Performance Bond to be duly executed by an authorized officer, agent, or representative.	

Contractor as Principal	Surety
_____ *(Full formal name of Contractor)*	_____ *(Full formal name of Surety) (corporate seal)*
By: _____ *(Signature)*	By: _____ *(Signature)(Attach Power of Attorney)*
Name: _____ *(Printed or typed)*	Name: _____ *(Printed or typed)*
Title: _____	Title: _____
Attest: _____ *(Signature)*	Attest: _____ *(Signature)*
Name: _____ *(Printed or typed)*	Name: _____ *(Printed or typed)*
Title: _____	Title: _____

Notes: (1) Provide supplemental execution by any additional parties, such as joint venturers. (2) Any singular reference to Contractor, Surety, Owner, or other party is considered plural where applicable.

Copyright© 2018 National Society of Professional Engineers, American Council of Engineering Companies, and American Society of Civil Engineers. All rights reserved.

1. The Contractor and Surety, jointly and severally, bind themselves, their heirs, executors, administrators, successors, and assigns to the Owner for the performance of the Construction Contract, which is incorporated herein by reference.
2. If the Contractor performs the Construction Contract, the Surety and the Contractor shall have no obligation under this Bond, except when applicable to participate in a conference as provided in Paragraph 3.
3. If there is no Owner Default under the Construction Contract, the Surety's obligation under this Bond will arise after:

   3.1. The Owner first provides notice to the Contractor and the Surety that the Owner is considering declaring a Contractor Default. Such notice may indicate whether the Owner is requesting a conference among the Owner, Contractor, and Surety to discuss the Contractor's performance. If the Owner does not request a conference, the Surety may, within five (5) business days after receipt of the Owner's notice, request such a conference. If the Surety timely requests a conference, the Owner shall attend. Unless the Owner agrees otherwise, any conference requested under this Paragraph 3.1 will be held within ten (10) business days of the Surety's receipt of the Owner's notice. If the Owner, the Contractor, and the Surety agree, the Contractor shall be allowed a reasonable time to perform the Construction Contract, but such an agreement does not waive the Owner's right, if any, subsequently to declare a Contractor Default;

   3.2. The Owner declares a Contractor Default, terminates the Construction Contract and notifies the Surety; and

   3.3. The Owner has agreed to pay the Balance of the Contract Price in accordance with the terms of the Construction Contract to the Surety or to a contractor selected to perform the Construction Contract.
4. Failure on the part of the Owner to comply with the notice requirement in Paragraph 3.1 does not constitute a failure to comply with a condition precedent to the Surety's obligations, or release the Surety from its obligations, except to the extent the Surety demonstrates actual prejudice.
5. When the Owner has satisfied the conditions of Paragraph 3, the Surety shall promptly and at the Surety's expense take one of the following actions:

   5.1. Arrange for the Contractor, with the consent of the Owner, to perform and complete the Construction Contract;

   5.2. Undertake to perform and complete the Construction Contract itself, through its agents or independent contractors;

   5.3. Obtain bids or negotiated proposals from qualified contractors acceptable to the Owner for a contract for performance and completion of the Construction Contract, arrange for a contract to be prepared for execution by the Owner and a contractor selected with the Owners concurrence, to be secured with performance and payment bonds executed by a qualified surety equivalent to the bonds issued on the Construction Contract, and pay to the Owner the amount of damages as described in Paragraph 7 in excess of the Balance of the Contract Price incurred by the Owner as a result of the Contractor Default; or

   5.4. Waive its right to perform and complete, arrange for completion, or obtain a new contractor, and with reasonable promptness under the circumstances:

      5.4.1 After investigation, determine the amount for which it may be liable to the Owner and, as soon as practicable after the amount is determined, make payment to the Owner; or

      5.4.2 Deny liability in whole or in part and notify the Owner, citing the reasons for denial.

Copyright© 2018 National Society of Professional Engineers, American Council of Engineering Companies, and American Society of Civil Engineers. All rights reserved.

6. If the Surety does not proceed as provided in Paragraph 5 with reasonable promptness, the Surety shall be deemed to be in default on this Bond seven days after receipt of an additional written notice from the Owner to the Surety demanding that the Surety perform its obligations under this Bond, and the Owner shall be entitled to enforce any remedy available to the Owner. If the Surety proceeds as provided in Paragraph 5.4, and the Owner refuses the payment, or the Surety has denied liability, in whole or in part, without further notice, the Owner shall be entitled to enforce any remedy available to the Owner.

7. If the Surety elects to act under Paragraph 5.1, 5.2, or 5.3, then the responsibilities of the Surety to the Owner will not be greater than those of the Contractor under the Construction Contract, and the responsibilities of the Owner to the Surety will not be greater than those of the Owner under the Construction Contract. Subject to the commitment by the Owner to pay the Balance of the Contract Price, the Surety is obligated, without duplication for:

    7.1. the responsibilities of the Contractor for correction of defective work and completion of the Construction Contract;

    7.2. additional legal, design professional, and delay costs resulting from the Contractor's Default, and resulting from the actions or failure to act of the Surety under Paragraph 5; and

    7.3. liquidated damages, or if no liquidated damages are specified in the Construction Contract, actual damages caused by delayed performance or non-performance of the Contractor.

8. If the Surety elects to act under Paragraph 5.1, 5.3, or 5.4, the Surety's liability is limited to the amount of this Bond.

9. The Surety shall not be liable to the Owner or others for obligations of the Contractor that are unrelated to the Construction Contract, and the Balance of the Contract Price will not be reduced or set off on account of any such unrelated obligations. No right of action will accrue on this Bond to any person or entity other than the Owner or its heirs, executors, administrators, successors, and assigns.

10. The Surety hereby waives notice of any change, including changes of time, to the Construction Contract or to related subcontracts, purchase orders, and other obligations.

11. Any proceeding, legal or equitable, under this Bond must be instituted in any court of competent jurisdiction in the location in which the work or part of the work is located and must be instituted within two years after a declaration of Contractor Default or within two years after the Contractor ceased working or within two years after the Surety refuses or fails to perform its obligations under this Bond, whichever occurs first. If the provisions of this paragraph are void or prohibited by law, the minimum periods of limitations available to sureties as a defense in the jurisdiction of the suit will be applicable.

12. Notice to the Surety, the Owner, or the Contractor must be mailed or delivered to the address shown on the page on which their signature appears.

13. When this Bond has been furnished to comply with a statutory or other legal requirement in the location where the construction was to be performed, any provision in this Bond conflicting with said statutory or legal requirement will be deemed deleted therefrom and provisions conforming to such statutory or other legal requirement will be deemed incorporated herein. When so furnished, the intent is that this Bond will be construed as a statutory bond and not as a common law bond.

14. Definitions

    14.1. *Balance of the Contract Price*—The total amount payable by the Owner to the Contractor under the Construction Contract after all proper adjustments have been made including allowance for the Contractor for any amounts received or to be received by the Owner in settlement of insurance or other claims for damages to which the Contractor is entitled, reduced by all valid and proper payments made to or on behalf of the Contractor under the Construction Contract.

Copyright© 2018 National Society of Professional Engineers, American Council of Engineering Companies, and American Society of Civil Engineers. All rights reserved.

14.2. *Construction Contract*—The agreement between the Owner and Contractor identified on the cover page, including all Contract Documents and changes made to the agreement and the Contract Documents.

14.3. *Contractor Default*—Failure of the Contractor, which has not been remedied or waived, to perform or otherwise to comply with a material term of the Construction Contract.

14.4. *Owner Default*—Failure of the Owner, which has not been remedied or waived, to pay the Contractor as required under the Construction Contract or to perform and complete or comply with the other material terms of the Construction Contract.

14.5. *Contract Documents*—All the documents that comprise the agreement between the Owner and Contractor.

15. If this Bond is issued for an agreement between a contractor and subcontractor, the term Contractor in this Bond will be deemed to be Subcontractor and the term Owner will be deemed to be Contractor.

16. Modifications to this Bond are as follows: **None**

Copyright© 2018 National Society of Professional Engineers, American Council of Engineering Companies, and American Society of Civil Engineers. All rights reserved.

PAYMENT BOND

Prepared By

EJCDC®
ENGINEERS JOINT CONTRACT DOCUMENTS COMMITTEE

ACEC
AMERICAN COUNCIL OF ENGINEERING COMPANIES

ASCE
AMERICAN SOCIETY OF CIVIL ENGINEERS

NSPE
NATIONAL SOCIETY OF PROFESSIONAL ENGINEERS

Endorsed By

CSI
Building Knowledge
Improving Project Delivery

NUCA
We Dig America

Copyright© 2018 National Society of Professional Engineers, American Council of Engineering Companies, and American Society of Civil Engineers. All rights reserved.

Copyright© 2018

National Society of Professional Engineers
1420 King Street, Alexandria, VA 22314-2794
(703) 684-2882
www.nspe.org

American Council of Engineering Companies
1015 15th Street N.W., Washington, DC 20005
(202) 347-7474
www.acec.org

American Society of Civil Engineers
1801 Alexander Bell Drive, Reston, VA 20191-4400
(800) 548-2723
www.asce.org

The copyright for this EJCDC document is owned jointly by the three sponsoring organizations listed above. The National Society of Professional Engineers is the Copyright Administrator for the EJCDC documents; please direct all inquiries regarding EJCDC copyrights to NSPE.

NOTE: EJCDC publications may be purchased at www.ejcdc.org, or from any of the sponsoring organizations above.

Copyright© 2018 National Society of Professional Engineers, American Council of Engineering Companies, and American Society of Civil Engineers. All rights reserved.

PAYMENT BOND

Contractor Name: Address *(principal place of business)*:	**Surety** Name: Address *(principal place of business)*:
Owner Name: Mailing address *(principal place of business)*:	**Contract** Description *(name and location)*: Contract Price: Effective Date of Contract:
Bond Bond Amount: Date of Bond: *(Date of Bond cannot be earlier than Effective Date of Contract)* Modifications to this Bond form: ☐ None ☐ See Paragraph 18	
Surety and Contractor, intending to be legally bound hereby, subject to the terms set forth in this Payment Bond, do each cause this Payment Bond to be duly executed by an authorized officer, agent, or representative.	

Contractor as Principal	Surety
_____ *(Full formal name of Contractor)*	_____ *(Full formal name of Surety) (corporate seal)*
By: _____ *(Signature)*	By: _____ *(Signature)(Attach Power of Attorney)*
Name: _____ *(Printed or typed)*	Name: _____ *(Printed or typed)*
Title: _____	Title: _____
Attest: _____ *(Signature)*	Attest: _____ *(Signature)*
Name: _____ *(Printed or typed)*	Name: _____ *(Printed or typed)*
Title: _____	Title: _____

Notes: (1) Provide supplemental execution by any additional parties, such as joint venturers. (2) Any singular reference to Contractor, Surety, Owner, or other party is considered plural where applicable.

Copyright© 2018 National Society of Professional Engineers, American Council of Engineering Companies, and American Society of Civil Engineers. All rights reserved.

1. The Contractor and Surety, jointly and severally, bind themselves, their heirs, executors, administrators, successors, and assigns to the Owner to pay for labor, materials, and equipment furnished for use in the performance of the Construction Contract, which is incorporated herein by reference, subject to the following terms.
2. If the Contractor promptly makes payment of all sums due to Claimants, and defends, indemnifies, and holds harmless the Owner from claims, demands, liens, or suits by any person or entity seeking payment for labor, materials, or equipment furnished for use in the performance of the Construction Contract, then the Surety and the Contractor shall have no obligation under this Bond.
3. If there is no Owner Default under the Construction Contract, the Surety's obligation to the Owner under this Bond will arise after the Owner has promptly notified the Contractor and the Surety (at the address described in Paragraph 13) of claims, demands, liens, or suits against the Owner or the Owner's property by any person or entity seeking payment for labor, materials, or equipment furnished for use in the performance of the Construction Contract, and tendered defense of such claims, demands, liens, or suits to the Contractor and the Surety.
4. When the Owner has satisfied the conditions in Paragraph 3, the Surety shall promptly and at the Surety's expense defend, indemnify, and hold harmless the Owner against a duly tendered claim, demand, lien, or suit.
5. The Surety's obligations to a Claimant under this Bond will arise after the following:
   - 5.1. Claimants who do not have a direct contract with the Contractor
     - 5.1.1. have furnished a written notice of non-payment to the Contractor, stating with substantial accuracy the amount claimed and the name of the party to whom the materials were, or equipment was, furnished or supplied or for whom the labor was done or performed, within ninety (90) days after having last performed labor or last furnished materials or equipment included in the Claim; and
     - 5.1.2. have sent a Claim to the Surety (at the address described in Paragraph 13).
   - 5.2. Claimants who are employed by or have a direct contract with the Contractor have sent a Claim to the Surety (at the address described in Paragraph 13).
6. If a notice of non-payment required by Paragraph 5.1.1 is given by the Owner to the Contractor, that is sufficient to satisfy a Claimant's obligation to furnish a written notice of non-payment under Paragraph 5.1.1.
7. When a Claimant has satisfied the conditions of Paragraph 5.1 or 5.2, whichever is applicable, the Surety shall promptly and at the Surety's expense take the following actions:
   - 7.1. Send an answer to the Claimant, with a copy to the Owner, within sixty (60) days after receipt of the Claim, stating the amounts that are undisputed and the basis for challenging any amounts that are disputed; and
   - 7.2. Pay or arrange for payment of any undisputed amounts.
   - 7.3. The Surety's failure to discharge its obligations under Paragraph 7.1 or 7.2 will not be deemed to constitute a waiver of defenses the Surety or Contractor may have or acquire as to a Claim, except as to undisputed amounts for which the Surety and Claimant have reached agreement. If, however, the Surety fails to discharge its obligations under Paragraph 7.1 or 7.2, the Surety shall indemnify the Claimant for the reasonable attorney's fees the Claimant incurs thereafter to recover any sums found to be due and owing to the Claimant.

Copyright© 2018 National Society of Professional Engineers, American Council of Engineering Companies, and American Society of Civil Engineers. All rights reserved.

8. The Surety's total obligation will not exceed the amount of this Bond, plus the amount of reasonable attorney's fees provided under Paragraph 7.3, and the amount of this Bond will be credited for any payments made in good faith by the Surety.
9. Amounts owed by the Owner to the Contractor under the Construction Contract will be used for the performance of the Construction Contract and to satisfy claims, if any, under any construction performance bond. By the Contractor furnishing and the Owner accepting this Bond, they agree that all funds earned by the Contractor in the performance of the Construction Contract are dedicated to satisfying obligations of the Contractor and Surety under this Bond, subject to the Owner's priority to use the funds for the completion of the work.
10. The Surety shall not be liable to the Owner, Claimants, or others for obligations of the Contractor that are unrelated to the Construction Contract. The Owner shall not be liable for the payment of any costs or expenses of any Claimant under this Bond, and shall have under this Bond no obligation to make payments to or give notice on behalf of Claimants, or otherwise have any obligations to Claimants under this Bond.
11. The Surety hereby waives notice of any change, including changes of time, to the Construction Contract or to related subcontracts, purchase orders, and other obligations.
12. No suit or action will be commenced by a Claimant under this Bond other than in a court of competent jurisdiction in the state in which the project that is the subject of the Construction Contract is located or after the expiration of one year from the date (1) on which the Claimant sent a Claim to the Surety pursuant to Paragraph 5.1.2 or 5.2, or (2) on which the last labor or service was performed by anyone or the last materials or equipment were furnished by anyone under the Construction Contract, whichever of (1) or (2) first occurs. If the provisions of this paragraph are void or prohibited by law, the minimum period of limitation available to sureties as a defense in the jurisdiction of the suit will be applicable.
13. Notice and Claims to the Surety, the Owner, or the Contractor must be mailed or delivered to the address shown on the page on which their signature appears. Actual receipt of notice or Claims, however accomplished, will be sufficient compliance as of the date received.
14. When this Bond has been furnished to comply with a statutory or other legal requirement in the location where the construction was to be performed, any provision in this Bond conflicting with said statutory or legal requirement will be deemed deleted here from and provisions conforming to such statutory or other legal requirement will be deemed incorporated herein. When so furnished, the intent is that this Bond will be construed as a statutory bond and not as a common law bond.
15. Upon requests by any person or entity appearing to be a potential beneficiary of this Bond, the Contractor and Owner shall promptly furnish a copy of this Bond or shall permit a copy to be made.
16. Definitions

    16.1. *Claim*—A written statement by the Claimant including at a minimum:

        16.1.1. The name of the Claimant;

        16.1.2. The name of the person for whom the labor was done, or materials or equipment furnished;

        16.1.3. A copy of the agreement or purchase order pursuant to which labor, materials, or equipment was furnished for use in the performance of the Construction Contract;

        16.1.4. A brief description of the labor, materials, or equipment furnished;

        16.1.5. The date on which the Claimant last performed labor or last furnished materials or equipment for use in the performance of the Construction Contract;

Copyright© 2018 National Society of Professional Engineers, American Council of Engineering Companies, and American Society of Civil Engineers. All rights reserved.

16.1.6. The total amount earned by the Claimant for labor, materials, or equipment furnished as of the date of the Claim;

16.1.7. The total amount of previous payments received by the Claimant; and

16.1.8. The total amount due and unpaid to the Claimant for labor, materials, or equipment furnished as of the date of the Claim.

16.2. *Claimant*—An individual or entity having a direct contract with the Contractor or with a subcontractor of the Contractor to furnish labor, materials, or equipment for use in the performance of the Construction Contract. The term Claimant also includes any individual or entity that has rightfully asserted a claim under an applicable mechanic's lien or similar statute against the real property upon which the Project is located. The intent of this Bond is to include without limitation in the terms of "labor, materials, or equipment" that part of the water, gas, power, light, heat, oil, gasoline, telephone service, or rental equipment used in the Construction Contract, architectural and engineering services required for performance of the work of the Contractor and the Contractor's subcontractors, and all other items for which a mechanic's lien may be asserted in the jurisdiction where the labor, materials, or equipment were furnished.

16.3. *Construction Contract*—The agreement between the Owner and Contractor identified on the cover page, including all Contract Documents and all changes made to the agreement and the Contract Documents.

16.4. *Owner Default*—Failure of the Owner, which has not been remedied or waived, to pay the Contractor as required under the Construction Contract or to perform and complete or comply with the other material terms of the Construction Contract.

16.5. *Contract Documents*—All the documents that comprise the agreement between the Owner and Contractor.

17. If this Bond is issued for an agreement between a contractor and subcontractor, the term Contractor in this Bond will be deemed to be Subcontractor and the term Owner will be deemed to be Contractor.

18. Modifications to this Bond are as follows: **None**

Copyright© 2018 National Society of Professional Engineers, American Council of Engineering Companies, and American Society of Civil Engineers. All rights reserved.

STANDARD GENERAL CONDITIONS OF THE CONSTRUCTION CONTRACT

Prepared by

EJCDC
ENGINEERS JOINT CONTRACT DOCUMENTS COMMITTEE

Issued and Published Jointly by

ACEC
AMERICAN COUNCIL OF ENGINEERING COMPANIES

ASCE
AMERICAN SOCIETY OF CIVIL ENGINEERS

National Society of Professional Engineers®

Copyright © 2013

Copyright © 2013 National Society of Professional Engineers, American Council of Engineering Companies, and American Society of Civil Engineers. All rights reserved.

STANDARD GENERAL CONDITIONS OF THE CONSTRUCTION CONTRACT

TABLE OF CONTENTS

Page

Article 1 – Definitions and Terminology 1
- 1.01 Defined Terms 1
- 1.02 Terminology 4

Article 2 – Preliminary Matters 5
- 2.01 Delivery of Bonds and Evidence of Insurance 5
- 2.02 Copies of Documents 6
- 2.03 Before Starting Construction 6
- 2.04 Preconstruction Conference; Designation of Authorized Representatives 6
- 2.05 Initial Acceptance of Schedules 6
- 2.06 Electronic Transmittals 7

Article 3 – Documents: Intent, Requirements, Reuse 7
- 3.01 Intent 7
- 3.02 Reference Standards 7
- 3.03 Reporting and Resolving Discrepancies 8
- 3.04 Requirements of the Contract Documents 8
- 3.05 Reuse of Documents 9

Article 4 – Commencement and Progress of the Work 9
- 4.01 Commencement of Contract Times; Notice to Proceed 9
- 4.02 Starting the Work 9
- 4.03 Reference Points 9
- 4.04 Progress Schedule 10
- 4.05 Delays in Contractor's Progress 10

Article 5 – Availability of Lands; Subsurface and Physical Conditions; Hazardous Environmental Conditions 11
- 5.01 Availability of Lands 11
- 5.02 Use of Site and Other Areas 11
- 5.03 Subsurface and Physical Conditions 12
- 5.04 Differing Subsurface or Physical Conditions 12
- 5.05 Underground Facilities 14
- 5.06 Hazardous Environmental Conditions at Site 15

Copyright © 2013 National Society of Professional Engineers, American Council of Engineering Companies, and American Society of Civil Engineers. All rights reserved.

Article 6 – Bonds and Insurance 17
6.01 Performance, Payment, and Other Bonds 17
6.02 Insurance—General Provisions 18
6.03 Contractor's Insurance 19
6.04 Owner's Liability Insurance 21
6.05 Property Insurance 21
6.06 Waiver of Rights 23
6.07 Receipt and Application of Property Insurance Proceeds 23
Article 7 – Contractor's Responsibilities 24
7.01 Supervision and Superintendence 24
7.02 Labor; Working Hours 24
7.03 Services, Materials, and Equipment 24
7.04 "Or Equals" 25
7.05 Substitutes 26
7.06 Concerning Subcontractors, Suppliers, and Others 27
7.07 Patent Fees and Royalties 28
7.08 Permits 29
7.09 Taxes 29
7.10 Laws and Regulations 29
7.11 Record Documents 30
7.12 Safety and Protection 30
7.13 Safety Representative 31
7.14 Hazard Communication Programs 31
7.15 Emergencies 31
7.16 Shop Drawings, Samples, and Other Submittals 31
7.17 Contractor's General Warranty and Guarantee 33
7.18 Indemnification 34
7.19 Delegation of Professional Design Services 35
Article 8 – Other Work at the Site 35
8.01 Other Work 35
8.02 Coordination 36
8.03 Legal Relationships 36
Article 9 – Owner's Responsibilities 37
9.01 Communications to Contractor 37

Copyright © 2013 National Society of Professional Engineers, American Council of Engineering Companies, and American Society of Civil Engineers. All rights reserved.

9.02 Replacement of Engineer 37
9.03 Furnish Data 37
9.04 Pay When Due 37
9.05 Lands and Easements; Reports, Tests, and Drawings 37
9.06 Insurance 37
9.07 Change Orders 38
9.08 Inspections, Tests, and Approvals 38
9.09 Limitations on Owner's Responsibilities 38
9.10 Undisclosed Hazardous Environmental Condition 38
9.11 Evidence of Financial Arrangements 38
9.12 Safety Programs 38
Article 10 – Engineer's Status During Construction 38
10.01 Owner's Representative 38
10.02 Visits to Site 38
10.03 Project Representative 39
10.04 Rejecting Defective Work 39
10.05 Shop Drawings, Change Orders and Payments 39
10.06 Determinations for Unit Price Work 39
10.07 Decisions on Requirements of Contract Documents and Acceptability of Work 39
10.08 Limitations on Engineer's Authority and Responsibilities 39
10.09 Compliance with Safety Program 40
Article 11 – Amending the Contract Documents; Changes in the Work 40
11.01 Amending and Supplementing Contract Documents 40
11.02 Owner-Authorized Changes in the Work 41
11.03 Unauthorized Changes in the Work 41
11.04 Change of Contract Price 41
11.05 Change of Contract Times 42
11.06 Change Proposals 43
11.07 Execution of Change Orders 43
11.08 Notification to Surety 44
Article 12 – Claims 44
12.01 Claims 44
Article 13 – Cost of the Work; Allowances; Unit Price Work 45
13.01 Cost of the Work 45

Copyright © 2013 National Society of Professional Engineers, American Council of Engineering Companies, and American Society of Civil Engineers. All rights reserved.

13.02 Allowances 47
13.03 Unit Price Work 48
Article 14 – Tests and Inspections; Correction, Removal or Acceptance of Defective Work 48
14.01 Access to Work 48
14.02 Tests, Inspections, and Approvals 49
14.03 Defective Work 49
14.04 Acceptance of Defective Work 50
14.05 Uncovering Work 50
14.06 Owner May Stop the Work 51
14.07 Owner May Correct Defective Work 51
Article 15 – Payments to Contractor; Set-Offs; Completion; Correction Period 51
15.01 Progress Payments 51
15.02 Contractor's Warranty of Title 54
15.03 Substantial Completion 54
15.04 Partial Use or Occupancy 55
15.05 Final Inspection 56
15.06 Final Payment 56
15.07 Waiver of Claims 57
15.08 Correction Period 57
Article 16 – Suspension of Work and Termination 58
16.01 Owner May Suspend Work 58
16.02 Owner May Terminate for Cause 58
16.03 Owner May Terminate For Convenience 59
16.04 Contractor May Stop Work or Terminate 59
Article 17 – Final Resolution of Disputes 60
17.01 Methods and Procedures 60
Article 18 – Miscellaneous 60
18.01 Giving Notice 60
18.02 Computation of Times 60
18.03 Cumulative Remedies 60
18.04 Limitation of Damages 61
18.05 No Waiver 61
18.06 Survival of Obligations 61
18.07 Controlling Law 61

Copyright © 2013 National Society of Professional Engineers, American Council of Engineering Companies, and American Society of Civil Engineers. All rights reserved.

18.08 Headings..... 61

Copyright © 2013 National Society of Professional Engineers, American Council of Engineering Companies, and American Society of Civil Engineers. All rights reserved.

ARTICLE 1 – DEFINITIONS AND TERMINOLOGY

1.01 *Defined Terms*

A. Wherever used in the Bidding Requirements or Contract Documents, a term printed with initial capital letters, including the term's singular and plural forms, will have the meaning indicated in the definitions below. In addition to terms specifically defined, terms with initial capital letters in the Contract Documents include references to identified articles and paragraphs, and the titles of other documents or forms.

1. *Addenda*—Written or graphic instruments issued prior to the opening of Bids which clarify, correct, or change the Bidding Requirements or the proposed Contract Documents.

2. *Agreement*—The written instrument, executed by Owner and Contractor, that sets forth the Contract Price and Contract Times, identifies the parties and the Engineer, and designates the specific items that are Contract Documents.

3. *Application for Payment*—The form acceptable to Engineer which is to be used by Contractor during the course of the Work in requesting progress or final payments and which is to be accompanied by such supporting documentation as is required by the Contract Documents.

4. *Bid*—The offer of a Bidder submitted on the prescribed form setting forth the prices for the Work to be performed.

5. *Bidder*—An individual or entity that submits a Bid to Owner.

6. *Bidding Documents*—The Bidding Requirements, the proposed Contract Documents, and all Addenda.

7. *Bidding Requirements*—The advertisement or invitation to bid, Instructions to Bidders, Bid Bond or other Bid security, if any, the Bid Form, and the Bid with any attachments.

8. *Change Order*—A document which is signed by Contractor and Owner and authorizes an addition, deletion, or revision in the Work or an adjustment in the Contract Price or the Contract Times, or other revision to the Contract, issued on or after the Effective Date of the Contract.

9. *Change Proposal*—A written request by Contractor, duly submitted in compliance with the procedural requirements set forth herein, seeking an adjustment in Contract Price or Contract Times, or both; contesting an initial decision by Engineer concerning the requirements of the Contract Documents or the acceptability of Work under the Contract Documents; challenging a set-off against payments due; or seeking other relief with respect to the terms of the Contract.

10. *Claim*—(a) A demand or assertion by Owner directly to Contractor, duly submitted in compliance with the procedural requirements set forth herein: seeking an adjustment of Contract Price or Contract Times, or both; contesting an initial decision by Engineer concerning the requirements of the Contract Documents or the acceptability of Work under the Contract Documents; contesting Engineer's decision regarding a Change Proposal; seeking resolution of a contractual issue that Engineer has declined to address; or seeking other relief with respect to the terms of the Contract; or (b) a demand or assertion by Contractor directly to Owner, duly submitted in compliance with the procedural requirements set forth herein, contesting Engineer's decision regarding a Change Proposal; or seeking resolution of a contractual issue that Engineer has declined to address. A demand for money or services by a third party is not a Claim.

Copyright © 2013 National Society of Professional Engineers, American Council of Engineering Companies, and American Society of Civil Engineers. All rights reserved.

11. *Constituent of Concern*—Asbestos, petroleum, radioactive materials, polychlorinated biphenyls (PCBs), hazardous waste, and any substance, product, waste, or other material of any nature whatsoever that is or becomes listed, regulated, or addressed pursuant to (a) the Comprehensive Environmental Response, Compensation and Liability Act, 42 U.S.C. §§9601 et seq. ("CERCLA"); (b) the Hazardous Materials Transportation Act, 49 U.S.C. §§5501 et seq.; (c) the Resource Conservation and Recovery Act, 42 U.S.C. §§6901 et seq. ("RCRA"); (d) the Toxic Substances Control Act, 15 U.S.C. §§2601 et seq.; (e) the Clean Water Act, 33 U.S.C. §§1251 et seq.; (f) the Clean Air Act, 42 U.S.C. §§7401 et seq.; or (g) any other federal, state, or local statute, law, rule, regulation, ordinance, resolution, code, order, or decree regulating, relating to, or imposing liability or standards of conduct concerning, any hazardous, toxic, or dangerous waste, substance, or material.
12. *Contract*—The entire and integrated written contract between the Owner and Contractor concerning the Work.
13. *Contract Documents*—Those items so designated in the Agreement, and which together comprise the Contract.
14. *Contract Price*—The money that Owner has agreed to pay Contractor for completion of the Work in accordance with the Contract Documents. .
15. *Contract Times*—The number of days or the dates by which Contractor shall: (a) achieve Milestones, if any; (b) achieve Substantial Completion; and (c) complete the Work.
16. *Contractor*—The individual or entity with which Owner has contracted for performance of the Work.
17. *Cost of the Work*—See Paragraph 13.01 for definition.
18. *Drawings*—The part of the Contract that graphically shows the scope, extent, and character of the Work to be performed by Contractor.
19. *Effective Date of the Contract*—The date, indicated in the Agreement, on which the Contract becomes effective.
20. *Engineer*—The individual or entity named as such in the Agreement.
21. *Field Order*—A written order issued by Engineer which requires minor changes in the Work but does not change the Contract Price or the Contract Times.
22. *Hazardous Environmental Condition*—The presence at the Site of Constituents of Concern in such quantities or circumstances that may present a danger to persons or property exposed thereto. The presence at the Site of materials that are necessary for the execution of the Work, or that are to be incorporated in the Work, and that are controlled and contained pursuant to industry practices, Laws and Regulations, and the requirements of the Contract, does not establish a Hazardous Environmental Condition.
23. *Laws and Regulations; Laws or Regulations*—Any and all applicable laws, statutes, rules, regulations, ordinances, codes, and orders of any and all governmental bodies, agencies, authorities, and courts having jurisdiction.
24. *Liens*—Charges, security interests, or encumbrances upon Contract-related funds, real property, or personal property.
25. *Milestone*—A principal event in the performance of the Work that the Contract requires Contractor to achieve by an intermediate completion date or by a time prior to Substantial Completion of all the Work.
26. *Notice of Award*—The written notice by Owner to a Bidder of Owner's acceptance of the Bid.

Copyright © 2013 National Society of Professional Engineers, American Council of Engineering Companies, and American Society of Civil Engineers. All rights reserved.

27. *Notice to Proceed*—A written notice by Owner to Contractor fixing the date on which the Contract Times will commence to run and on which Contractor shall start to perform the Work.

28. *Owner*—The individual or entity with which Contractor has contracted regarding the Work, and which has agreed to pay Contractor for the performance of the Work, pursuant to the terms of the Contract.

29. *Progress Schedule*—A schedule, prepared and maintained by Contractor, describing the sequence and duration of the activities comprising the Contractor's plan to accomplish the Work within the Contract Times.

30. *Project*—The total undertaking to be accomplished for Owner by engineers, contractors, and others, including planning, study, design, construction, testing, commissioning, and start-up, and of which the Work to be performed under the Contract Documents is a part.

31. *Project Manual*—The written documents prepared for, or made available for, procuring and constructing the Work, including but not limited to the Bidding Documents or other construction procurement documents, geotechnical and existing conditions information, the Agreement, bond forms, General Conditions, Supplementary Conditions, and Specifications. The contents of the Project Manual may be bound in one or more volumes.

32. *Resident Project Representative*—The authorized representative of Engineer assigned to assist Engineer at the Site. As used herein, the term Resident Project Representative or "RPR" includes any assistants or field staff of Resident Project Representative.

33. *Samples*—Physical examples of materials, equipment, or workmanship that are representative of some portion of the Work and that establish the standards by which such portion of the Work will be judged.

34. *Schedule of Submittals*—A schedule, prepared and maintained by Contractor, of required submittals and the time requirements for Engineer's review of the submittals and the performance of related construction activities.

35. *Schedule of Values*—A schedule, prepared and maintained by Contractor, allocating portions of the Contract Price to various portions of the Work and used as the basis for reviewing Contractor's Applications for Payment.

36. *Shop Drawings*—All drawings, diagrams, illustrations, schedules, and other data or information that are specifically prepared or assembled by or for Contractor and submitted by Contractor to illustrate some portion of the Work. Shop Drawings, whether approved or not, are not Drawings and are not Contract Documents.

37. *Site*—Lands or areas indicated in the Contract Documents as being furnished by Owner upon which the Work is to be performed, including rights-of-way and easements, and such other lands furnished by Owner which are designated for the use of Contractor.

38. *Specifications*—The part of the Contract that consists of written requirements for materials, equipment, systems, standards, and workmanship as applied to the Work, and certain administrative requirements and procedural matters applicable to the Work.

39. *Subcontractor*—An individual or entity having a direct contract with Contractor or with any other Subcontractor for the performance of a part of the Work.

40. *Substantial Completion*—The time at which the Work (or a specified part thereof) has progressed to the point where, in the opinion of Engineer, the Work (or a specified part thereof) is sufficiently complete, in accordance with the Contract Documents, so that the Work (or a specified part thereof) can be utilized for the purposes for which it is intended.

Copyright © 2013 National Society of Professional Engineers, American Council of Engineering Companies, and American Society of Civil Engineers. All rights reserved.

The terms "substantially complete" and "substantially completed" as applied to all or part of the Work refer to Substantial Completion thereof.

41. *Successful Bidder*—The Bidder whose Bid the Owner accepts, and to which the Owner makes an award of contract, subject to stated conditions.

42. *Supplementary Conditions*—The part of the Contract that amends or supplements these General Conditions.

43. *Supplier*—A manufacturer, fabricator, supplier, distributor, materialman, or vendor having a direct contract with Contractor or with any Subcontractor to furnish materials or equipment to be incorporated in the Work by Contractor or a Subcontractor.

44. *Technical Data*—Those items expressly identified as Technical Data in the Supplementary Conditions, with respect to either (a) subsurface conditions at the Site, or physical conditions relating to existing surface or subsurface structures at the Site (except Underground Facilities) or (b) Hazardous Environmental Conditions at the Site. If no such express identifications of Technical Data have been made with respect to conditions at the Site, then the data contained in boring logs, recorded measurements of subsurface water levels, laboratory test results, and other factual, objective information regarding conditions at the Site that are set forth in any geotechnical or environmental report prepared for the Project and made available to Contractor are hereby defined as Technical Data with respect to conditions at the Site under Paragraphs 5.03, 5.04, and 5.06.

45. *Underground Facilities*—All underground pipelines, conduits, ducts, cables, wires, manholes, vaults, tanks, tunnels, or other such facilities or attachments, and any encasements containing such facilities, including but not limited to those that convey electricity, gases, steam, liquid petroleum products, telephone or other communications, fiber optic transmissions, cable television, water, wastewater, storm water, other liquids or chemicals, or traffic or other control systems.

46. *Unit Price Work*—Work to be paid for on the basis of unit prices.

47. *Work*—The entire construction or the various separately identifiable parts thereof required to be provided under the Contract Documents. Work includes and is the result of performing or providing all labor, services, and documentation necessary to produce such construction; furnishing, installing, and incorporating all materials and equipment into such construction; and may include related services such as testing, start-up, and commissioning, all as required by the Contract Documents.

48. *Work Change Directive*—A written directive to Contractor issued on or after the Effective Date of the Contract, signed by Owner and recommended by Engineer, ordering an addition, deletion, or revision in the Work.

1.02 *Terminology*

A. The words and terms discussed in the following paragraphs are not defined but, when used in the Bidding Requirements or Contract Documents, have the indicated meaning.

B. *Intent of Certain Terms or Adjectives*:

1. The Contract Documents include the terms "as allowed," "as approved," "as ordered," "as directed" or terms of like effect or import to authorize an exercise of professional judgment by Engineer. In addition, the adjectives "reasonable," "suitable," "acceptable," "proper," "satisfactory," or adjectives of like effect or import are used to describe an action or determination of Engineer as to the Work. It is intended that such exercise of professional judgment, action, or determination will be solely to evaluate, in general, the Work for compliance with the information in the Contract Documents and with the design concept of the Project as a functioning whole as shown or indicated in the Contract

Copyright © 2013 National Society of Professional Engineers, American Council of Engineering Companies, and American Society of Civil Engineers. All rights reserved.

Documents (unless there is a specific statement indicating otherwise). The use of any such term or adjective is not intended to and shall not be effective to assign to Engineer any duty or authority to supervise or direct the performance of the Work, or any duty or authority to undertake responsibility contrary to the provisions of Article 10 or any other provision of the Contract Documents.

C. *Day*:

1. The word "day" means a calendar day of 24 hours measured from midnight to the next midnight.

D. *Defective*:

1. The word "defective," when modifying the word "Work," refers to Work that is unsatisfactory, faulty, or deficient in that it:

a. does not conform to the Contract Documents; or

b. does not meet the requirements of any applicable inspection, reference standard, test, or approval referred to in the Contract Documents; or

c. has been damaged prior to Engineer's recommendation of final payment (unless responsibility for the protection thereof has been assumed by Owner at Substantial Completion in accordance with Paragraph 15.03 or 15.04).

E. *Furnish, Install, Perform, Provide*:

1. The word "furnish," when used in connection with services, materials, or equipment, shall mean to supply and deliver said services, materials, or equipment to the Site (or some other specified location) ready for use or installation and in usable or operable condition.

2. The word "install," when used in connection with services, materials, or equipment, shall mean to put into use or place in final position said services, materials, or equipment complete and ready for intended use.

3. The words "perform" or "provide," when used in connection with services, materials, or equipment, shall mean to furnish and install said services, materials, or equipment complete and ready for intended use.

4. If the Contract Documents establish an obligation of Contractor with respect to specific services, materials, or equipment, but do not expressly use any of the four words "furnish," "install," "perform," or "provide," then Contractor shall furnish and install said services, materials, or equipment complete and ready for intended use.

F. Unless stated otherwise in the Contract Documents, words or phrases that have a well-known technical or construction industry or trade meaning are used in the Contract Documents in accordance with such recognized meaning.

ARTICLE 2 – PRELIMINARY MATTERS

2.01 *Delivery of Bonds and Evidence of Insurance*

A. *Bonds*: When Contractor delivers the executed counterparts of the Agreement to Owner, Contractor shall also deliver to Owner such bonds as Contractor may be required to furnish.

B. *Evidence of Contractor's Insurance*: When Contractor delivers the executed counterparts of the Agreement to Owner, Contractor shall also deliver to Owner, with copies to each named insured and additional insured (as identified in the Supplementary Conditions or elsewhere in

Copyright © 2013 National Society of Professional Engineers, American Council of Engineering Companies, and American Society of Civil Engineers. All rights reserved.

the Contract), the certificates and other evidence of insurance required to be provided by Contractor in accordance with Article 6.

C. *Evidence of Owner's Insurance*: After receipt of the executed counterparts of the Agreement and all required bonds and insurance documentation, Owner shall promptly deliver to Contractor, with copies to each named insured and additional insured (as identified in the Supplementary Conditions or otherwise), the certificates and other evidence of insurance required to be provided by Owner under Article 6.

2.02 *Copies of Documents*

A. Owner shall furnish to Contractor four printed copies of the Contract (including one fully executed counterpart of the Agreement), and one copy in electronic portable document format (PDF). Additional printed copies will be furnished upon request at the cost of reproduction.

B. Owner shall maintain and safeguard at least one original printed record version of the Contract, including Drawings and Specifications signed and sealed by Engineer and other design professionals. Owner shall make such original printed record version of the Contract available to Contractor for review. Owner may delegate the responsibilities under this provision to Engineer.

2.03 *Before Starting Construction*

A. *Preliminary Schedules*: Within 10 days after the Effective Date of the Contract (or as otherwise specifically required by the Contract Documents), Contractor shall submit to Engineer for timely review:

1. A preliminary Progress Schedule indicating the times (numbers of days or dates) for starting and completing the various stages of the Work, including any Milestones specified in the Contract;

2. A preliminary Schedule of Submittals

2.04 *Preconstruction Conference; Designation of Authorized Representatives*

A. Before any Work at the Site is started, a conference attended by Owner, Contractor, Engineer, and others as appropriate will be held to establish a working understanding among the parties as to the Work and to discuss the schedules referred to in Paragraph 2.03.A, procedures for handling Shop Drawings, Samples, and other submittals, processing Applications for Payment, electronic or digital transmittals, and maintaining required records.

B. At this conference Owner and Contractor each shall designate, in writing, a specific individual to act as its authorized representative with respect to the services and responsibilities under the Contract. Such individuals shall have the authority to transmit and receive information, render decisions relative to the Contract, and otherwise act on behalf of each respective party.

2.05 *Initial Acceptance of Schedules*

A. At least 10 days before submission of the first Application for Payment, the Contractor shall submit to the Engineer for acceptability to Engineer as provided below the schedules submitted in accordance with Paragraph 2.03.A. Contractor shall have an additional 10 days to make corrections and adjustments and to complete and resubmit the schedules. No progress payment shall be made to Contractor until acceptable schedules are submitted to Engineer.

1. The Progress Schedule will be acceptable to Engineer if it provides an orderly progression of the Work to completion within the Contract Times. Such acceptance will not impose on Engineer responsibility for the Progress Schedule, for sequencing, scheduling, or progress of the Work, nor interfere with or relieve Contractor from Contractor's full responsibility therefore.

Copyright © 2013 National Society of Professional Engineers, American Council of Engineering Companies, and American Society of Civil Engineers. All rights reserved.

2. Contractor's Schedule of Submittals will be acceptable to Engineer if it provides a workable arrangement for reviewing and processing the required submittals.

2.06 *Electronic Transmittals*

A. Except as otherwise stated elsewhere in the Contract, the Owner, Engineer, and Contractor may transmit, and shall accept, Project-related correspondence, text, data, documents, drawings, information, and graphics, including but not limited to Shop Drawings and other submittals, in electronic media or digital format, either directly, or through access to a secure Project website.

B. If the Contract does not establish protocols for electronic or digital transmittals, then Owner, Engineer, and Contractor shall jointly develop such protocols.

C. When transmitting items in electronic media or digital format, the transmitting party makes no representations as to long term compatibility, usability, or readability of the items resulting from the recipient's use of software application packages, operating systems, or computer hardware differing from those used in the drafting or transmittal of the items, or from those established in applicable transmittal protocols.

ARTICLE 3 – DOCUMENTS: INTENT, REQUIREMENTS, REUSE

3.01 *Intent*

A. The Contract Documents are complementary; what is required by one is as binding as if required by all.

B. It is the intent of the Contract Documents to describe a functionally complete project (or part thereof) to be constructed in accordance with the Contract Documents.

C. Unless otherwise stated in the Contract Documents, if there is a discrepancy between the electronic or digital versions of the Contract Documents (including any printed copies derived from such electronic or digital versions) and the printed record version, the printed record version shall govern.

D. The Contract supersedes prior negotiations, representations, and agreements, whether written or oral.

E. Engineer will issue clarifications and interpretations of the Contract Documents as provided herein.

3.02 *Reference Standards*

A. Standards Specifications, Codes, Laws and Regulations

1. Reference in the Contract Documents to standard specifications, manuals, reference standards, or codes of any technical society, organization, or association, or to Laws or Regulations, whether such reference be specific or by implication, shall mean the standard specification, manual, reference standard, code, or Laws or Regulations in effect at the time of opening of Bids (or on the Effective Date of the Contract if there were no Bids), except as may be otherwise specifically stated in the Contract Documents.

2. No provision of any such standard specification, manual, reference standard, or code, or any instruction of a Supplier, shall be effective to change the duties or responsibilities of Owner, Contractor, or Engineer, or any of their subcontractors, consultants, agents, or employees, from those set forth in the part of the Contract Documents prepared by or for Engineer. No such provision or instruction shall be effective to assign to Owner, Engineer, or any of their officers, directors, members, partners, employees, agents, consultants, or subcontractors, any duty or authority to supervise or direct the

Copyright © 2013 National Society of Professional Engineers, American Council of Engineering Companies, and American Society of Civil Engineers. All rights reserved.

performance of the Work or any duty or authority to undertake responsibility inconsistent with the provisions of the part of the Contract Documents prepared by or for Engineer.

3.03 *Reporting and Resolving Discrepancies*

A. *Reporting Discrepancies*:

1. *Contractor's Verification of Figures and Field Measurements*: Before undertaking each part of the Work, Contractor shall carefully study the Contract Documents, and check and verify pertinent figures and dimensions therein, particularly with respect to applicable field measurements. Contractor shall promptly report in writing to Engineer any conflict, error, ambiguity, or discrepancy that Contractor discovers, or has actual knowledge of, and shall not proceed with any Work affected thereby until the conflict, error, ambiguity, or discrepancy is resolved, by a clarification or interpretation by Engineer, or by an amendment or supplement to the Contract Documents issued pursuant to Paragraph 11.01.

2. *Contractor's Review of Contract Documents*: If, before or during the performance of the Work, Contractor discovers any conflict, error, ambiguity, or discrepancy within the Contract Documents, or between the Contract Documents and (a) any applicable Law or Regulation, (b) actual field conditions, (c) any standard specification, manual, reference standard, or code, or (d) any instruction of any Supplier, then Contractor shall promptly report it to Engineer in writing. Contractor shall not proceed with the Work affected thereby (except in an emergency as required by Paragraph 7.15) until the conflict, error, ambiguity, or discrepancy is resolved, by a clarification or interpretation by Engineer, or by an amendment or supplement to the Contract Documents issued pursuant to Paragraph 11.01.

3. Contractor shall not be liable to Owner or Engineer for failure to report any conflict, error, ambiguity, or discrepancy in the Contract Documents unless Contractor had actual knowledge thereof.

B. *Resolving Discrepancies*:

1. Except as may be otherwise specifically stated in the Contract Documents, the provisions of the part of the Contract Documents prepared by or for Engineer shall take precedence in resolving any conflict, error, ambiguity, or discrepancy between such provisions of the Contract Documents and:

a. the provisions of any standard specification, manual, reference standard, or code, or the instruction of any Supplier (whether or not specifically incorporated by reference as a Contract Document); or

b. the provisions of any Laws or Regulations applicable to the performance of the Work (unless such an interpretation of the provisions of the Contract Documents would result in violation of such Law or Regulation).

3.04 *Requirements of the Contract Documents*

A. During the performance of the Work and until final payment, Contractor and Owner shall submit to the Engineer all matters in question concerning the requirements of the Contract Documents (sometimes referred to as requests for information or interpretation—RFIs), or relating to the acceptability of the Work under the Contract Documents, as soon as possible after such matters arise. Engineer will be the initial interpreter of the requirements of the Contract Documents, and judge of the acceptability of the Work thereunder.

B. Engineer will, with reasonable promptness, render a written clarification, interpretation, or decision on the issue submitted, or initiate an amendment or supplement to the Contract Documents. Engineer's written clarification, interpretation, or decision will be final and

Copyright © 2013 National Society of Professional Engineers, American Council of Engineering Companies, and American Society of Civil Engineers. All rights reserved.

binding on Contractor, unless it appeals by submitting a Change Proposal, and on Owner, unless it appeals by filing a Claim.

C. If a submitted matter in question concerns terms and conditions of the Contract Documents that do not involve (1) the performance or acceptability of the Work under the Contract Documents, (2) the design (as set forth in the Drawings, Specifications, or otherwise), or (3) other engineering or technical matters, then Engineer will promptly give written notice to Owner and Contractor that Engineer is unable to provide a decision or interpretation. If Owner and Contractor are unable to agree on resolution of such a matter in question, either party may pursue resolution as provided in Article 12.

3.05 *Reuse of Documents*

A. Contractor and its Subcontractors and Suppliers shall not:

1. have or acquire any title to or ownership rights in any of the Drawings, Specifications, or other documents (or copies of any thereof) prepared by or bearing the seal of Engineer or its consultants, including electronic media editions, or reuse any such Drawings, Specifications, other documents, or copies thereof on extensions of the Project or any other project without written consent of Owner and Engineer and specific written verification or adaptation by Engineer; or

2. have or acquire any title or ownership rights in any other Contract Documents, reuse any such Contract Documents for any purpose without Owner's express written consent, or violate any copyrights pertaining to such Contract Documents.

B. The prohibitions of this Paragraph 3.05 will survive final payment, or termination of the Contract. Nothing herein shall preclude Contractor from retaining copies of the Contract Documents for record purposes.

ARTICLE 4 – COMMENCEMENT AND PROGRESS OF THE WORK

4.01 *Commencement of Contract Times; Notice to Proceed*

A. The Contract Times will commence to run on the thirtieth day after the Effective Date of the Contract or, if a Notice to Proceed is given, on the day indicated in the Notice to Proceed. A Notice to Proceed may be given at any time within 30 days after the Effective Date of the Contract. In no event will the Contract Times commence to run later than the sixtieth day after the day of Bid opening or the thirtieth day after the Effective Date of the Contract, whichever date is earlier.

4.02 *Starting the Work*

A. Contractor shall start to perform the Work on the date when the Contract Times commence to run. No Work shall be done at the Site prior to such date.

4.03 *Reference Points*

A. Owner shall provide engineering surveys to establish reference points for construction which in Engineer's judgment are necessary to enable Contractor to proceed with the Work. Contractor shall be responsible for laying out the Work, shall protect and preserve the established reference points and property monuments, and shall make no changes or relocations without the prior written approval of Owner. Contractor shall report to Engineer whenever any reference point or property monument is lost or destroyed or requires relocation because of necessary changes in grades or locations, and shall be responsible for the accurate replacement or relocation of such reference points or property monuments by professionally qualified personnel.

Copyright © 2013 National Society of Professional Engineers, American Council of Engineering Companies, and American Society of Civil Engineers. All rights reserved.

4.04 *Progress Schedule*

A. Contractor shall adhere to the Progress Schedule established in accordance with Paragraph 2.05 as it may be adjusted from time to time as provided below.

1. Contractor shall submit to Engineer for acceptance (to the extent indicated in Paragraph 2.05) proposed adjustments in the Progress Schedule that will not result in changing the Contract Times.

2. Proposed adjustments in the Progress Schedule that will change the Contract Times shall be submitted in accordance with the requirements of Article 11.

B. Contractor shall carry on the Work and adhere to the Progress Schedule during all disputes or disagreements with Owner. No Work shall be delayed or postponed pending resolution of any disputes or disagreements, or during any appeal process, except as permitted by Paragraph 16.04, or as Owner and Contractor may otherwise agree in writing.

4.05 *Delays in Contractor's Progress*

A. If Owner, Engineer, or anyone for whom Owner is responsible, delays, disrupts, or interferes with the performance or progress of the Work, then Contractor shall be entitled to an equitable adjustment in the Contract Times and Contract Price. Contractor's entitlement to an adjustment of the Contract Times is conditioned on such adjustment being essential to Contractor's ability to complete the Work within the Contract Times.

B. Contractor shall not be entitled to an adjustment in Contract Price or Contract Times for delay, disruption, or interference caused by or within the control of Contractor. Delay, disruption, and interference attributable to and within the control of a Subcontractor or Supplier shall be deemed to be within the control of Contractor.

C. If Contractor's performance or progress is delayed, disrupted, or interfered with by unanticipated causes not the fault of and beyond the control of Owner, Contractor, and those for which they are responsible, then Contractor shall be entitled to an equitable adjustment in Contract Times. Contractor's entitlement to an adjustment of the Contract Times is conditioned on such adjustment being essential to Contractor's ability to complete the Work within the Contract Times. Such an adjustment shall be Contractor's sole and exclusive remedy for the delays, disruption, and interference described in this paragraph. Causes of delay, disruption, or interference that may give rise to an adjustment in Contract Times under this paragraph include but are not limited to the following:

1. severe and unavoidable natural catastrophes such as fires, floods, epidemics, and earthquakes;
2. abnormal weather conditions;
3. acts or failures to act of utility owners (other than those performing other work at or adjacent to the Site by arrangement with the Owner, as contemplated in Article 8); and
4. acts of war or terrorism.

D. Delays, disruption, and interference to the performance or progress of the Work resulting from the existence of a differing subsurface or physical condition, an Underground Facility that was not shown or indicated by the Contract Documents, or not shown or indicated with reasonable accuracy, and those resulting from Hazardous Environmental Conditions, are governed by Article 5.

E. Paragraph 8.03 governs delays, disruption, and interference to the performance or progress of the Work resulting from the performance of certain other work at or adjacent to the Site.

Copyright © 2013 National Society of Professional Engineers, American Council of Engineering Companies, and American Society of Civil Engineers. All rights reserved.

F. Contractor shall not be entitled to an adjustment in Contract Price or Contract Times for any delay, disruption, or interference if such delay is concurrent with a delay, disruption, or interference caused by or within the control of Contractor.

G. Contractor must submit any Change Proposal seeking an adjustment in Contract Price or Contract Times under this paragraph within 30 days of the commencement of the delaying, disrupting, or interfering event.

ARTICLE 5 – AVAILABILITY OF LANDS; SUBSURFACE AND PHYSICAL CONDITIONS; HAZARDOUS ENVIRONMENTAL CONDITIONS

5.01 *Availability of Lands*

A. Owner shall furnish the Site. Owner shall notify Contractor of any encumbrances or restrictions not of general application but specifically related to use of the Site with which Contractor must comply in performing the Work.

B. Upon reasonable written request, Owner shall furnish Contractor with a current statement of record legal title and legal description of the lands upon which permanent improvements are to be made and Owner's interest therein as necessary for giving notice of or filing a mechanic's or construction lien against such lands in accordance with applicable Laws and Regulations.

C. Contractor shall provide for all additional lands and access thereto that may be required for temporary construction facilities or storage of materials and equipment.

5.02 *Use of Site and Other Areas*

A. *Limitation on Use of Site and Other Areas*:

1. Contractor shall confine construction equipment, temporary construction facilities, the storage of materials and equipment, and the operations of workers to the Site, adjacent areas that Contractor has arranged to use through construction easements or otherwise, and other adjacent areas permitted by Laws and Regulations, and shall not unreasonably encumber the Site and such other adjacent areas with construction equipment or other materials or equipment. Contractor shall assume full responsibility for (a) damage to the Site; (b) damage to any such other adjacent areas used for Contractor's operations; (c) damage to any other adjacent land or areas; and (d) for injuries and losses sustained by the owners or occupants of any such land or areas; provided that such damage or injuries result from the performance of the Work or from other actions or conduct of the Contractor or those for which Contractor is responsible.

2. If a damage or injury claim is made by the owner or occupant of any such land or area because of the performance of the Work, or because of other actions or conduct of the Contractor or those for which Contractor is responsible, Contractor shall (a) take immediate corrective or remedial action as required by Paragraph 7.12, or otherwise; (b) promptly attempt to settle the claim as to all parties through negotiations with such owner or occupant, or otherwise resolve the claim by arbitration or other dispute resolution proceeding, or at law; and (c) to the fullest extent permitted by Laws and Regulations, indemnify and hold harmless Owner and Engineer, and the officers, directors, members, partners, employees, agents, consultants and subcontractors of each and any of them from and against any such claim, and against all costs, losses, and damages (including but not limited to all fees and charges of engineers, architects, attorneys, and other professionals and all court or arbitration or other dispute resolution costs) arising out of or relating to any claim or action, legal or equitable, brought by any such owner or occupant against Owner, Engineer, or any other party indemnified hereunder to the extent caused directly or indirectly, in whole or in part by, or based upon, Contractor's performance of the

Copyright © 2013 National Society of Professional Engineers, American Council of Engineering Companies, and American Society of Civil Engineers. All rights reserved.

Work, or because of other actions or conduct of the Contractor or those for which Contractor is responsible.

B. *Removal of Debris During Performance of the Work*: During the progress of the Work the Contractor shall keep the Site and other adjacent areas free from accumulations of waste materials, rubbish, and other debris. Removal and disposal of such waste materials, rubbish, and other debris shall conform to applicable Laws and Regulations.

C. *Cleaning*: Prior to Substantial Completion of the Work Contractor shall clean the Site and the Work and make it ready for utilization by Owner. At the completion of the Work Contractor shall remove from the Site and adjacent areas all tools, appliances, construction equipment and machinery, and surplus materials and shall restore to original condition all property not designated for alteration by the Contract Documents.

D. *Loading of Structures*: Contractor shall not load nor permit any part of any structure to be loaded in any manner that will endanger the structure, nor shall Contractor subject any part of the Work or adjacent structures or land to stresses or pressures that will endanger them.

5.03 *Subsurface and Physical Conditions*

A. *Reports and Drawings*: The Supplementary Conditions identify:

1. those reports known to Owner of explorations and tests of subsurface conditions at or adjacent to the Site;

2. those drawings known to Owner of physical conditions relating to existing surface or subsurface structures at the Site (except Underground Facilities); and

3. Technical Data contained in such reports and drawings.

B. *Reliance by Contractor on Technical Data Authorized*: Contractor may rely upon the accuracy of the Technical Data expressly identified in the Supplementary Conditions with respect to such reports and drawings, but such reports and drawings are not Contract Documents. If no such express identification has been made, then Contractor may rely upon the accuracy of the Technical Data (as defined in Article 1) contained in any geotechnical or environmental report prepared for the Project and made available to Contractor. Except for such reliance on Technical Data, Contractor may not rely upon or make any claim against Owner or Engineer, or any of their officers, directors, members, partners, employees, agents, consultants, or subcontractors, with respect to:

1. the completeness of such reports and drawings for Contractor's purposes, including, but not limited to, any aspects of the means, methods, techniques, sequences, and procedures of construction to be employed by Contractor, and safety precautions and programs incident thereto; or

2. other data, interpretations, opinions, and information contained in such reports or shown or indicated in such drawings; or

3. any Contractor interpretation of or conclusion drawn from any Technical Data or any such other data, interpretations, opinions, or information.

5.04 *Differing Subsurface or Physical Conditions*

A. *Notice by Contractor*: If Contractor believes that any subsurface or physical condition that is uncovered or revealed at the Site either:

1. is of such a nature as to establish that any Technical Data on which Contractor is entitled to rely as provided in Paragraph 5.03 is materially inaccurate; or

2. is of such a nature as to require a change in the Drawings or Specifications; or

Copyright © 2013 National Society of Professional Engineers, American Council of Engineering Companies, and American Society of Civil Engineers. All rights reserved.

3. differs materially from that shown or indicated in the Contract Documents; or

4. is of an unusual nature, and differs materially from conditions ordinarily encountered and generally recognized as inherent in work of the character provided for in the Contract Documents;

then Contractor shall, promptly after becoming aware thereof and before further disturbing the subsurface or physical conditions or performing any Work in connection therewith (except in an emergency as required by Paragraph 7.15), notify Owner and Engineer in writing about such condition. Contractor shall not further disturb such condition or perform any Work in connection therewith (except with respect to an emergency) until receipt of a written statement permitting Contractor to do so.

B. *Engineer's Review*: After receipt of written notice as required by the preceding paragraph, Engineer will promptly review the subsurface or physical condition in question; determine the necessity of Owner's obtaining additional exploration or tests with respect to the condition; conclude whether the condition falls within any one or more of the differing site condition categories in Paragraph 5.04.A above; obtain any pertinent cost or schedule information from Contractor; prepare recommendations to Owner regarding the Contractor's resumption of Work in connection with the subsurface or physical condition in question and the need for any change in the Drawings or Specifications; and advise Owner in writing of Engineer's findings, conclusions, and recommendations.

C. *Owner's Statement to Contractor Regarding Site Condition*: After receipt of Engineer's written findings, conclusions, and recommendations, Owner shall issue a written statement to Contractor (with a copy to Engineer) regarding the subsurface or physical condition in question, addressing the resumption of Work in connection with such condition, indicating whether any change in the Drawings or Specifications will be made, and adopting or rejecting Engineer's written findings, conclusions, and recommendations, in whole or in part.

D. *Possible Price and Times Adjustments*:

1. Contractor shall be entitled to an equitable adjustment in Contract Price or Contract Times, or both, to the extent that the existence of a differing subsurface or physical condition, or any related delay, disruption, or interference, causes an increase or decrease in Contractor's cost of, or time required for, performance of the Work; subject, however, to the following:

   a. such condition must fall within any one or more of the categories described in Paragraph 5.04.A;

   b. with respect to Work that is paid for on a unit price basis, any adjustment in Contract Price will be subject to the provisions of Paragraph 13.03; and,

   c. Contractor's entitlement to an adjustment of the Contract Times is conditioned on such adjustment being essential to Contractor's ability to complete the Work within the Contract Times.

2. Contractor shall not be entitled to any adjustment in the Contract Price or Contract Times with respect to a subsurface or physical condition if:

   a. Contractor knew of the existence of such condition at the time Contractor made a commitment to Owner with respect to Contract Price and Contract Times by the submission of a Bid or becoming bound under a negotiated contract, or otherwise; or

   b. the existence of such condition reasonably could have been discovered or revealed as a result of any examination, investigation, exploration, test, or study of the Site and contiguous areas expressly required by the Bidding Requirements or Contract

Copyright © 2013 National Society of Professional Engineers, American Council of Engineering Companies, and American Society of Civil Engineers. All rights reserved.

Documents to be conducted by or for Contractor prior to Contractor's making such commitment; or

c. Contractor failed to give the written notice as required by Paragraph 5.04.A.

3. If Owner and Contractor agree regarding Contractor's entitlement to and the amount or extent of any adjustment in the Contract Price or Contract Times, or both, then any such adjustment shall be set forth in a Change Order.

4. Contractor may submit a Change Proposal regarding its entitlement to or the amount or extent of any adjustment in the Contract Price or Contract Times, or both, no later than 30 days after Owner's issuance of the Owner's written statement to Contractor regarding the subsurface or physical condition in question.

5.05 *Underground Facilities*

A. *Contractor's Responsibilities*: The information and data shown or indicated in the Contract Documents with respect to existing Underground Facilities at or adjacent to the Site is based on information and data furnished to Owner or Engineer by the owners of such Underground Facilities, including Owner, or by others. Unless it is otherwise expressly provided in the Supplementary Conditions:

1. Owner and Engineer do not warrant or guarantee the accuracy or completeness of any such information or data provided by others; and

2. the cost of all of the following will be included in the Contract Price, and Contractor shall have full responsibility for:

a. reviewing and checking all information and data regarding existing Underground Facilities at the Site;

b. locating all Underground Facilities shown or indicated in the Contract Documents as being at the Site;

c. coordination of the Work with the owners (including Owner) of such Underground Facilities, during construction; and

d. the safety and protection of all existing Underground Facilities at the Site, and repairing any damage thereto resulting from the Work.

B. *Notice by Contractor*: If Contractor believes that an Underground Facility that is uncovered or revealed at the Site was not shown or indicated in the Contract Documents, or was not shown or indicated with reasonable accuracy, then Contractor shall, promptly after becoming aware thereof and before further disturbing conditions affected thereby or performing any Work in connection therewith (except in an emergency as required by Paragraph 7.15), identify the owner of such Underground Facility and give written notice to that owner and to Owner and Engineer.

C. *Engineer's Review*: Engineer will promptly review the Underground Facility and conclude whether such Underground Facility was not shown or indicated in the Contract Documents, or was not shown or indicated with reasonable accuracy; obtain any pertinent cost or schedule information from Contractor; prepare recommendations to Owner regarding the Contractor's resumption of Work in connection with the Underground Facility in question; determine the extent, if any, to which a change is required in the Drawings or Specifications to reflect and document the consequences of the existence or location of the Underground Facility; and advise Owner in writing of Engineer's findings, conclusions, and recommendations. During such time, Contractor shall be responsible for the safety and protection of such Underground Facility.

Copyright © 2013 National Society of Professional Engineers, American Council of Engineering Companies, and American Society of Civil Engineers. All rights reserved.

D. *Owner's Statement to Contractor Regarding Underground Facility*: After receipt of Engineer's written findings, conclusions, and recommendations, Owner shall issue a written statement to Contractor (with a copy to Engineer) regarding the Underground Facility in question, addressing the resumption of Work in connection with such Underground Facility, indicating whether any change in the Drawings or Specifications will be made, and adopting or rejecting Engineer's written findings, conclusions, and recommendations in whole or in part.

E. *Possible Price and Times Adjustments*:

1. Contractor shall be entitled to an equitable adjustment in the Contract Price or Contract Times, or both, to the extent that any existing Underground Facility at the Site that was not shown or indicated in the Contract Documents, or was not shown or indicated with reasonable accuracy, or any related delay, disruption, or interference, causes an increase or decrease in Contractor's cost of, or time required for, performance of the Work; subject, however, to the following:

   a. Contractor did not know of and could not reasonably have been expected to be aware of or to have anticipated the existence or actual location of the Underground Facility in question;

   b. With respect to Work that is paid for on a unit price basis, any adjustment in Contract Price will be subject to the provisions of Paragraph 13.03;

   c. Contractor's entitlement to an adjustment of the Contract Times is conditioned on such adjustment being essential to Contractor's ability to complete the Work within the Contract Times; and

   d. Contractor gave the notice required in Paragraph 5.05.B.

2. If Owner and Contractor agree regarding Contractor's entitlement to and the amount or extent of any adjustment in the Contract Price or Contract Times, or both, then any such adjustment shall be set forth in a Change Order.

3. Contractor may submit a Change Proposal regarding its entitlement to or the amount or extent of any adjustment in the Contract Price or Contract Times, or both, no later than 30 days after Owner's issuance of the Owner's written statement to Contractor regarding the Underground Facility in question.

5.06 *Hazardous Environmental Conditions at Site*

A. *Reports and Drawings*: The Supplementary Conditions identify:

1. those reports and drawings known to Owner relating to Hazardous Environmental Conditions that have been identified at or adjacent to the Site; and

2. Technical Data contained in such reports and drawings.

B. *Reliance by Contractor on Technical Data Authorized*: Contractor may rely upon the accuracy of the Technical Data expressly identified in the Supplementary Conditions with respect to such reports and drawings, but such reports and drawings are not Contract Documents. If no such express identification has been made, then Contractor may rely on the accuracy of the Technical Data (as defined in Article 1) contained in any geotechnical or environmental report prepared for the Project and made available to Contractor. Except for such reliance on Technical Data, Contractor may not rely upon or make any claim against Owner or Engineer, or any of their officers, directors, members, partners, employees, agents, consultants, or subcontractors with respect to:

1. the completeness of such reports and drawings for Contractor's purposes, including, but not limited to, any aspects of the means, methods, techniques, sequences and procedures

Copyright © 2013 National Society of Professional Engineers, American Council of Engineering Companies, and American Society of Civil Engineers. All rights reserved.

of construction to be employed by Contractor and safety precautions and programs incident thereto; or

2. other data, interpretations, opinions and information contained in such reports or shown or indicated in such drawings; or

3. any Contractor interpretation of or conclusion drawn from any Technical Data or any such other data, interpretations, opinions or information.

C. Contractor shall not be responsible for removing or remediating any Hazardous Environmental Condition encountered, uncovered, or revealed at the Site unless such removal or remediation is expressly identified in the Contract Documents to be within the scope of the Work.

D. Contractor shall be responsible for controlling, containing, and duly removing all Constituents of Concern brought to the Site by Contractor, Subcontractors, Suppliers, or anyone else for whom Contractor is responsible, and for any associated costs; and for the costs of removing and remediating any Hazardous Environmental Condition created by the presence of any such Constituents of Concern.

E. If Contractor encounters, uncovers, or reveals a Hazardous Environmental Condition whose removal or remediation is not expressly identified in the Contract Documents as being within the scope of the Work, or if Contractor or anyone for whom Contractor is responsible creates a Hazardous Environmental Condition, then Contractor shall immediately: (1) secure or otherwise isolate such condition; (2) stop all Work in connection with such condition and in any area affected thereby (except in an emergency as required by Paragraph 7.15); and (3) notify Owner and Engineer (and promptly thereafter confirm such notice in writing). Owner shall promptly consult with Engineer concerning the necessity for Owner to retain a qualified expert to evaluate such condition or take corrective action, if any. Promptly after consulting with Engineer, Owner shall take such actions as are necessary to permit Owner to timely obtain required permits and provide Contractor the written notice required by Paragraph 5.06.F. If Contractor or anyone for whom Contractor is responsible created the Hazardous Environmental Condition in question, then Owner may remove and remediate the Hazardous Environmental Condition, and impose a set-off against payments to account for the associated costs.

F. Contractor shall not resume Work in connection with such Hazardous Environmental Condition or in any affected area until after Owner has obtained any required permits related thereto, and delivered written notice to Contractor either (1) specifying that such condition and any affected area is or has been rendered safe for the resumption of Work, or (2) specifying any special conditions under which such Work may be resumed safely.

G. If Owner and Contractor cannot agree as to entitlement to or on the amount or extent, if any, of any adjustment in Contract Price or Contract Times, or both, as a result of such Work stoppage or such special conditions under which Work is agreed to be resumed by Contractor, then within 30 days of Owner's written notice regarding the resumption of Work, Contractor may submit a Change Proposal, or Owner may impose a set-off.

H. If after receipt of such written notice Contractor does not agree to resume such Work based on a reasonable belief it is unsafe, or does not agree to resume such Work under such special conditions, then Owner may order the portion of the Work that is in the area affected by such condition to be deleted from the Work, following the contractual change procedures in Article 11. Owner may have such deleted portion of the Work performed by Owner's own forces or others in accordance with Article 8.

I. To the fullest extent permitted by Laws and Regulations, Owner shall indemnify and hold harmless Contractor, Subcontractors, and Engineer, and the officers, directors, members, partners, employees, agents, consultants, and subcontractors of each and any of them from and

Copyright © 2013 National Society of Professional Engineers, American Council of Engineering Companies, and American Society of Civil Engineers. All rights reserved.

against all claims, costs, losses, and damages (including but not limited to all fees and charges of engineers, architects, attorneys, and other professionals and all court or arbitration or other dispute resolution costs) arising out of or relating to a Hazardous Environmental Condition, provided that such Hazardous Environmental Condition (1) was not shown or indicated in the Drawings, Specifications, or other Contract Documents, identified as Technical Data entitled to limited reliance pursuant to Paragraph 5.06.B, or identified in the Contract Documents to be included within the scope of the Work, and (2) was not created by Contractor or by anyone for whom Contractor is responsible. Nothing in this Paragraph 5.06.H shall obligate Owner to indemnify any individual or entity from and against the consequences of that individual's or entity's own negligence.

J. To the fullest extent permitted by Laws and Regulations, Contractor shall indemnify and hold harmless Owner and Engineer, and the officers, directors, members, partners, employees, agents, consultants, and subcontractors of each and any of them from and against all claims, costs, losses, and damages (including but not limited to all fees and charges of engineers, architects, attorneys, and other professionals and all court or arbitration or other dispute resolution costs) arising out of or relating to the failure to control, contain, or remove a Constituent of Concern brought to the Site by Contractor or by anyone for whom Contractor is responsible, or to a Hazardous Environmental Condition created by Contractor or by anyone for whom Contractor is responsible. Nothing in this Paragraph 5.06.J shall obligate Contractor to indemnify any individual or entity from and against the consequences of that individual's or entity's own negligence.

K. The provisions of Paragraphs 5.03, 5.04, and 5.05 do not apply to the presence of Constituents of Concern or to a Hazardous Environmental Condition uncovered or revealed at the Site.

ARTICLE 6 – BONDS AND INSURANCE

6.01 *Performance, Payment, and Other Bonds*

A. Contractor shall furnish a performance bond and a payment bond, each in an amount at least equal to the Contract Price, as security for the faithful performance and payment of all of Contractor's obligations under the Contract. These bonds shall remain in effect until one year after the date when final payment becomes due or until completion of the correction period specified in Paragraph 15.08, whichever is later, except as provided otherwise by Laws or Regulations, the Supplementary Conditions, or other specific provisions of the Contract. Contractor shall also furnish such other bonds as are required by the Supplementary Conditions or other specific provisions of the Contract.

B. All bonds shall be in the form prescribed by the Contract except as provided otherwise by Laws or Regulations, and shall be executed by such sureties as are named in "Companies Holding Certificates of Authority as Acceptable Sureties on Federal Bonds and as Acceptable Reinsuring Companies" as published in Circular 570 (as amended and supplemented) by the Financial Management Service, Surety Bond Branch, U.S. Department of the Treasury. A bond signed by an agent or attorney-in-fact must be accompanied by a certified copy of that individual's authority to bind the surety. The evidence of authority shall show that it is effective on the date the agent or attorney-in-fact signed the accompanying bond.

C. Contractor shall obtain the required bonds from surety companies that are duly licensed or authorized in the jurisdiction in which the Project is located to issue bonds in the required amounts.

D. If the surety on a bond furnished by Contractor is declared bankrupt or becomes insolvent, or its right to do business is terminated in any state or jurisdiction where any part of the Project is located, or the surety ceases to meet the requirements above, then Contractor shall promptly notify Owner and Engineer and shall, within 20 days after the event giving rise to such

Copyright © 2013 National Society of Professional Engineers, American Council of Engineering Companies, and American Society of Civil Engineers. All rights reserved.

notification, provide another bond and surety, both of which shall comply with the bond and surety requirements above.

E. If Contractor has failed to obtain a required bond, Owner may exclude the Contractor from the Site and exercise Owner's termination rights under Article 16.

F. Upon request, Owner shall provide a copy of the payment bond to any Subcontractor, Supplier, or other person or entity claiming to have furnished labor or materials used in the performance of the Work.

6.02 *Insurance—General Provisions*

A. Owner and Contractor shall obtain and maintain insurance as required in this Article and in the Supplementary Conditions.

B. All insurance required by the Contract to be purchased and maintained by Owner or Contractor shall be obtained from insurance companies that are duly licensed or authorized, in the state or jurisdiction in which the Project is located, to issue insurance policies for the required limits and coverages. Unless a different standard is indicated in the Supplementary Conditions, all companies that provide insurance policies required under this Contract shall have an A.M. Best rating of A-VII or better.

C. Contractor shall deliver to Owner, with copies to each named insured and additional insured (as identified in this Article, in the Supplementary Conditions, or elsewhere in the Contract), certificates of insurance establishing that Contractor has obtained and is maintaining the policies, coverages, and endorsements required by the Contract. Upon request by Owner or any other insured, Contractor shall also furnish other evidence of such required insurance, including but not limited to copies of policies and endorsements, and documentation of applicable self-insured retentions and deductibles. Contractor may block out (redact) any confidential premium or pricing information contained in any policy or endorsement furnished under this provision.

D. Owner shall deliver to Contractor, with copies to each named insured and additional insured (as identified in this Article, the Supplementary Conditions, or elsewhere in the Contract), certificates of insurance establishing that Owner has obtained and is maintaining the policies, coverages, and endorsements required of Owner by the Contract (if any). Upon request by Contractor or any other insured, Owner shall also provide other evidence of such required insurance (if any), including but not limited to copies of policies and endorsements, and documentation of applicable self-insured retentions and deductibles. Owner may block out (redact) any confidential premium or pricing information contained in any policy or endorsement furnished under this provision.

E. Failure of Owner or Contractor to demand such certificates or other evidence of the other party's full compliance with these insurance requirements, or failure of Owner or Contractor to identify a deficiency in compliance from the evidence provided, shall not be construed as a waiver of the other party's obligation to obtain and maintain such insurance.

F. If either party does not purchase or maintain all of the insurance required of such party by the Contract, such party shall notify the other party in writing of such failure to purchase prior to the start of the Work, or of such failure to maintain prior to any change in the required coverage.

G. If Contractor has failed to obtain and maintain required insurance, Owner may exclude the Contractor from the Site, impose an appropriate set-off against payment, and exercise Owner's termination rights under Article 16.

H. Without prejudice to any other right or remedy, if a party has failed to obtain required insurance, the other party may elect to obtain equivalent insurance to protect such other party's

Copyright © 2013 National Society of Professional Engineers, American Council of Engineering Companies, and American Society of Civil Engineers. All rights reserved.

interests at the expense of the party who was required to provide such coverage, and the Contract Price shall be adjusted accordingly.

I. Owner does not represent that insurance coverage and limits established in this Contract necessarily will be adequate to protect Contractor or Contractor's interests.

J. The insurance and insurance limits required herein shall not be deemed as a limitation on Contractor's liability under the indemnities granted to Owner and other individuals and entities in the Contract.

6.03 *Contractor's Insurance*

A. *Workers' Compensation*: Contractor shall purchase and maintain workers' compensation and employer's liability insurance for:

1. claims under workers' compensation, disability benefits, and other similar employee benefit acts.
2. United States Longshoreman and Harbor Workers' Compensation Act and Jones Act coverage (if applicable).
3. claims for damages because of bodily injury, occupational sickness or disease, or death of Contractor's employees (by stop-gap endorsement in monopolist worker's compensation states).
4. Foreign voluntary worker compensation (if applicable).

B. *Commercial General Liability—Claims Covered*: Contractor shall purchase and maintain commercial general liability insurance, covering all operations by or on behalf of Contractor, on an occurrence basis, against:

1. claims for damages because of bodily injury, sickness or disease, or death of any person other than Contractor's employees.
2. claims for damages insured by reasonably available personal injury liability coverage.
3. claims for damages, other than to the Work itself, because of injury to or destruction of tangible property wherever located, including loss of use resulting therefrom.

C. *Commercial General Liability—Form and Content*: Contractor's commercial liability policy shall be written on a 1996 (or later) ISO commercial general liability form (occurrence form) and include the following coverages and endorsements:

1. Products and completed operations coverage:
   a. Such insurance shall be maintained for three years after final payment.
   b. Contractor shall furnish Owner and each other additional insured (as identified in the Supplementary Conditions or elsewhere in the Contract) evidence of continuation of such insurance at final payment and three years thereafter.
2. Blanket contractual liability coverage, to the extent permitted by law, including but not limited to coverage of Contractor's contractual indemnity obligations in Paragraph 7.18.
3. Broad form property damage coverage.
4. Severability of interest.
5. Underground, explosion, and collapse coverage.
6. Personal injury coverage.

Copyright © 2013 National Society of Professional Engineers, American Council of Engineering Companies, and American Society of Civil Engineers. All rights reserved.

7. Additional insured endorsements that include both ongoing operations and products and completed operations coverage through ISO Endorsements CG 20 10 10 01 and CG 20 37 10 01 (together); or CG 20 10 07 04 and CG 20 37 07 04 (together); or their equivalent.

8. For design professional additional insureds, ISO Endorsement CG 20 32 07 04, "Additional Insured—Engineers, Architects or Surveyors Not Engaged by the Named Insured" or its equivalent.

D. *Automobile liability*: Contractor shall purchase and maintain automobile liability insurance against claims for damages because of bodily injury or death of any person or property damage arising out of the ownership, maintenance, or use of any motor vehicle. The automobile liability policy shall be written on an occurrence basis.

E. *Umbrella or excess liability*: Contractor shall purchase and maintain umbrella or excess liability insurance written over the underlying employer's liability, commercial general liability, and automobile liability insurance described in the paragraphs above. Subject to industry-standard exclusions, the coverage afforded shall follow form as to each and every one of the underlying policies.

F. *Contractor's pollution liability insurance*: Contractor shall purchase and maintain a policy covering third-party injury and property damage claims, including clean-up costs, as a result of pollution conditions arising from Contractor's operations and completed operations. This insurance shall be maintained for no less than three years after final completion.

G. *Additional insureds*: The Contractor's commercial general liability, automobile liability, umbrella or excess, and pollution liability policies shall include and list as additional insureds Owner and Engineer, and any individuals or entities identified in the Supplementary Conditions; include coverage for the respective officers, directors, members, partners, employees, agents, consultants, and subcontractors of each and any of all such additional insureds; and the insurance afforded to these additional insureds shall provide primary coverage for all claims covered thereby (including as applicable those arising from both ongoing and completed operations) on a non-contributory basis. Contractor shall obtain all necessary endorsements to support these requirements.

H. *Contractor's professional liability insurance*: If Contractor will provide or furnish professional services under this Contract, through a delegation of professional design services or otherwise, then Contractor shall be responsible for purchasing and maintaining applicable professional liability insurance. This insurance shall provide protection against claims arising out of performance of professional design or related services, and caused by a negligent error, omission, or act for which the insured party is legally liable. It shall be maintained throughout the duration of the Contract and for a minimum of two years after Substantial Completion. If such professional design services are performed by a Subcontractor, and not by Contractor itself, then the requirements of this paragraph may be satisfied through the purchasing and maintenance of such insurance by such Subcontractor.

I. *General provisions*: The policies of insurance required by this Paragraph 6.03 shall:

1. include at least the specific coverages provided in this Article.

2. be written for not less than the limits of liability provided in this Article and in the Supplementary Conditions, or required by Laws or Regulations, whichever is greater.

3. contain a provision or endorsement that the coverage afforded will not be canceled, materially changed, or renewal refused until at least 10 days prior written notice has been given to Contractor. Within three days of receipt of any such written notice, Contractor shall provide a copy of the notice to Owner, Engineer, and each other insured under the policy.

Copyright © 2013 National Society of Professional Engineers, American Council of Engineering Companies, and American Society of Civil Engineers. All rights reserved.

4. remain in effect at least until final payment (and longer if expressly required in this Article) and at all times thereafter when Contractor may be correcting, removing, or replacing defective Work as a warranty or correction obligation, or otherwise, or returning to the Site to conduct other tasks arising from the Contract Documents.

5. be appropriate for the Work being performed and provide protection from claims that may arise out of or result from Contractor's performance of the Work and Contractor's other obligations under the Contract Documents, whether it is to be performed by Contractor, any Subcontractor or Supplier, or by anyone directly or indirectly employed by any of them to perform any of the Work, or by anyone for whose acts any of them may be liable.

J. The coverage requirements for specific policies of insurance must be met by such policies, and not by reference to excess or umbrella insurance provided in other policies.

6.04 *Owner's Liability Insurance*

A. In addition to the insurance required to be provided by Contractor under Paragraph 6.03, Owner, at Owner's option, may purchase and maintain at Owner's expense Owner's own liability insurance as will protect Owner against claims which may arise from operations under the Contract Documents.

B. Owner's liability policies, if any, operate separately and independently from policies required to be provided by Contractor, and Contractor cannot rely upon Owner's liability policies for any of Contractor's obligations to the Owner, Engineer, or third parties.

6.05 *Property Insurance*

A. *Builder's Risk*: Unless otherwise provided in the Supplementary Conditions, Contractor shall purchase and maintain builder's risk insurance upon the Work on a completed value basis, in the amount of the full insurable replacement cost thereof (subject to such deductible amounts as may be provided in the Supplementary Conditions or required by Laws and Regulations). This insurance shall:

1. include the Owner and Contractor as named insureds, and all Subcontractors, and any individuals or entities required by the Supplementary Conditions to be insured under such builder's risk policy, as insureds or named insureds. For purposes of the remainder of this Paragraph 6.05, Paragraphs 6.06 and 6.07, and any corresponding Supplementary Conditions, the parties required to be insured shall collectively be referred to as "insureds."

2. be written on a builder's risk "all risk" policy form that shall at least include insurance for physical loss or damage to the Work, temporary buildings, falsework, and materials and equipment in transit, and shall insure against at least the following perils or causes of loss: fire; lightning; windstorm; riot; civil commotion; terrorism; vehicle impact; aircraft; smoke; theft; vandalism and malicious mischief; mechanical breakdown, boiler explosion, and artificially generated electric current; earthquake; volcanic activity, and other earth movement; flood; collapse; explosion; debris removal; demolition occasioned by enforcement of Laws and Regulations; water damage (other than that caused by flood); and such other perils or causes of loss as may be specifically required by the Supplementary Conditions. If insurance against mechanical breakdown, boiler explosion, and artificially generated electric current; earthquake; volcanic activity, and other earth movement; or flood, are not commercially available under builder's risk policies, by endorsement or otherwise, such insurance may be provided through other insurance policies acceptable to Owner and Contractor.

3. cover, as insured property, at least the following: (a) the Work and all materials, supplies, machinery, apparatus, equipment, fixtures, and other property of a similar nature that are

Copyright © 2013 National Society of Professional Engineers, American Council of Engineering Companies, and American Society of Civil Engineers. All rights reserved.

to be incorporated into or used in the preparation, fabrication, construction, erection, or completion of the Work, including Owner-furnished or assigned property; (b) spare parts inventory required within the scope of the Contract; and (c) temporary works which are not intended to form part of the permanent constructed Work but which are intended to provide working access to the Site, or to the Work under construction, or which are intended to provide temporary support for the Work under construction, including scaffolding, form work, fences, shoring, falsework, and temporary structures.

4. cover expenses incurred in the repair or replacement of any insured property (including but not limited to fees and charges of engineers and architects).
5. extend to cover damage or loss to insured property while in temporary storage at the Site or in a storage location outside the Site (but not including property stored at the premises of a manufacturer or Supplier).
6. extend to cover damage or loss to insured property while in transit.
7. allow for partial occupation or use of the Work by Owner, such that those portions of the Work that are not yet occupied or used by Owner shall remain covered by the builder's risk insurance.
8. allow for the waiver of the insurer's subrogation rights, as set forth below.
9. provide primary coverage for all losses and damages caused by the perils or causes of loss covered.
10. not include a co-insurance clause.
11. include an exception for ensuing losses from physical damage or loss with respect to any defective workmanship, design, or materials exclusions.
12. include performance/hot testing and start-up.
13. be maintained in effect, subject to the provisions herein regarding Substantial Completion and partial occupancy or use of the Work by Owner, until the Work is complete.

B. *Notice of Cancellation or Change*: All the policies of insurance (and the certificates or other evidence thereof) required to be purchased and maintained in accordance with this Paragraph 6.05 will contain a provision or endorsement that the coverage afforded will not be canceled or materially changed or renewal refused until at least 10 days prior written notice has been given to the purchasing policyholder. Within three days of receipt of any such written notice, the purchasing policyholder shall provide a copy of the notice to each other insured.

C. *Deductibles*: The purchaser of any required builder's risk or property insurance shall pay for costs not covered because of the application of a policy deductible.

D. *Partial Occupancy or Use by Owner*: If Owner will occupy or use a portion or portions of the Work prior to Substantial Completion of all the Work as provided in Paragraph 15.04, then Owner (directly, if it is the purchaser of the builder's risk policy, or through Contractor) will provide notice of such occupancy or use to the builder's risk insurer. The builder's risk insurance shall not be canceled or permitted to lapse on account of any such partial use or occupancy; rather, those portions of the Work that are occupied or used by Owner may come off the builder's risk policy, while those portions of the Work not yet occupied or used by Owner shall remain covered by the builder's risk insurance.

E. *Additional Insurance*: If Contractor elects to obtain other special insurance to be included in or supplement the builder's risk or property insurance policies provided under this Paragraph 6.05, it may do so at Contractor's expense.

Copyright © 2013 National Society of Professional Engineers, American Council of Engineering Companies, and American Society of Civil Engineers. All rights reserved.

F. *Insurance of Other Property*: If the express insurance provisions of the Contract do not require or address the insurance of a property item or interest, such as tools, construction equipment, or other personal property owned by Contractor, a Subcontractor, or an employee of Contractor or a Subcontractor, then the entity or individual owning such property item will be responsible for deciding whether to insure it, and if so in what amount.

6.06 *Waiver of Rights*

A. All policies purchased in accordance with Paragraph 6.05, expressly including the builder's risk policy, shall contain provisions to the effect that in the event of payment of any loss or damage the insurers will have no rights of recovery against any insureds thereunder, or against Engineer or its consultants, or their officers, directors, members, partners, employees, agents, consultants, or subcontractors. Owner and Contractor waive all rights against each other and the respective officers, directors, members, partners, employees, agents, consultants, and subcontractors of each and any of them, for all losses and damages caused by, arising out of, or resulting from any of the perils or causes of loss covered by such policies and any other property insurance applicable to the Work; and, in addition, waive all such rights against Engineer, its consultants, all Subcontractors, all individuals or entities identified in the Supplementary Conditions as insureds, and the officers, directors, members, partners, employees, agents, consultants, and subcontractors of each and any of them, under such policies for losses and damages so caused. None of the above waivers shall extend to the rights that any party making such waiver may have to the proceeds of insurance held by Owner or Contractor as trustee or fiduciary, or otherwise payable under any policy so issued.

B. Owner waives all rights against Contractor, Subcontractors, and Engineer, and the officers, directors, members, partners, employees, agents, consultants and subcontractors of each and any of them, for:

1. loss due to business interruption, loss of use, or other consequential loss extending beyond direct physical loss or damage to Owner's property or the Work caused by, arising out of, or resulting from fire or other perils whether or not insured by Owner; and

2. loss or damage to the completed Project or part thereof caused by, arising out of, or resulting from fire or other insured peril or cause of loss covered by any property insurance maintained on the completed Project or part thereof by Owner during partial occupancy or use pursuant to Paragraph 15.04, after Substantial Completion pursuant to Paragraph 15.03, or after final payment pursuant to Paragraph 15.06.

C. Any insurance policy maintained by Owner covering any loss, damage or consequential loss referred to in Paragraph 6.06.B shall contain provisions to the effect that in the event of payment of any such loss, damage, or consequential loss, the insurers will have no rights of recovery against Contractor, Subcontractors, or Engineer, or the officers, directors, members, partners, employees, agents, consultants, or subcontractors of each and any of them.

D. Contractor shall be responsible for assuring that the agreement under which a Subcontractor performs a portion of the Work contains provisions whereby the Subcontractor waives all rights against Owner, Contractor, all individuals or entities identified in the Supplementary Conditions as insureds, the Engineer and its consultants, and the officers, directors, members, partners, employees, agents, consultants, and subcontractors of each and any of them, for all losses and damages caused by, arising out of, relating to, or resulting from any of the perils or causes of loss covered by builder's risk insurance and any other property insurance applicable to the Work.

6.07 *Receipt and Application of Property Insurance Proceeds*

A. Any insured loss under the builder's risk and other policies of insurance required by Paragraph 6.05 will be adjusted and settled with the named insured that purchased the policy. Such named

Copyright © 2013 National Society of Professional Engineers, American Council of Engineering Companies, and American Society of Civil Engineers. All rights reserved.

insured shall act as fiduciary for the other insureds, and give notice to such other insureds that adjustment and settlement of a claim is in progress. Any other insured may state its position regarding a claim for insured loss in writing within 15 days after notice of such claim.

B. Proceeds for such insured losses may be made payable by the insurer either jointly to multiple insureds, or to the named insured that purchased the policy in its own right and as fiduciary for other insureds, subject to the requirements of any applicable mortgage clause. A named insured receiving insurance proceeds under the builder's risk and other policies of insurance required by Paragraph 6.05 shall distribute such proceeds in accordance with such agreement as the parties in interest may reach, or as otherwise required under the dispute resolution provisions of this Contract or applicable Laws and Regulations.

C. If no other special agreement is reached, the damaged Work shall be repaired or replaced, the money so received applied on account thereof, and the Work and the cost thereof covered by Change Order, if needed.

ARTICLE 7 – CONTRACTOR'S RESPONSIBILITIES

7.01 *Supervision and Superintendence*

A. Contractor shall supervise, inspect, and direct the Work competently and efficiently, devoting such attention thereto and applying such skills and expertise as may be necessary to perform the Work in accordance with the Contract Documents. Contractor shall be solely responsible for the means, methods, techniques, sequences, and procedures of construction.

B. At all times during the progress of the Work, Contractor shall assign a competent resident superintendent who shall not be replaced without written notice to Owner and Engineer except under extraordinary circumstances.

7.02 *Labor; Working Hours*

A. Contractor shall provide competent, suitably qualified personnel to survey and lay out the Work and perform construction as required by the Contract Documents. Contractor shall at all times maintain good discipline and order at the Site.

B. Except as otherwise required for the safety or protection of persons or the Work or property at the Site or adjacent thereto, and except as otherwise stated in the Contract Documents, all Work at the Site shall be performed during regular working hours, Monday through Friday. Contractor may perform Work outside regular working hours or on Saturdays, Sundays, or legal holidays only with Owner's consent, which will not be unreasonably withheld.

7.03 *Services, Materials, and Equipment*

A. Unless otherwise specified in the Contract Documents, Contractor shall provide and assume full responsibility for all services, materials, equipment, labor, transportation, construction equipment and machinery, tools, appliances, fuel, power, light, heat, telephone, water, sanitary facilities, temporary facilities, and all other facilities and incidentals necessary for the performance, testing, start up, and completion of the Work, whether or not such items are specifically called for in the Contract Documents.

B. All materials and equipment incorporated into the Work shall be of good quality and new, except as otherwise provided in the Contract Documents. All special warranties and guarantees required by the Specifications shall expressly run to the benefit of Owner. If required by Engineer, Contractor shall furnish satisfactory evidence (including reports of required tests) as to the source, kind, and quality of materials and equipment.

Copyright © 2013 National Society of Professional Engineers, American Council of Engineering Companies, and American Society of Civil Engineers. All rights reserved.

C. All materials and equipment shall be stored, applied, installed, connected, erected, protected, used, cleaned, and conditioned in accordance with instructions of the applicable Supplier, except as otherwise may be provided in the Contract Documents.

7.04 *"Or Equals"*

A. Whenever an item of material or equipment is specified or described in the Contract Documents by using the name of a proprietary item or the name of a particular Supplier, the Contract Price has been based upon Contractor furnishing such item as specified. The specification or description of such an item is intended to establish the type, function, appearance, and quality required. Unless the specification or description contains or is followed by words reading that no like, equivalent, or "or equal" item is permitted, Contractor may request that Engineer authorize the use of other items of material or equipment, or items from other proposed suppliers under the circumstances described below.

1. If Engineer in its sole discretion determines that an item of material or equipment proposed by Contractor is functionally equal to that named and sufficiently similar so that no change in related Work will be required, Engineer shall deem it an "or equal" item. For the purposes of this paragraph, a proposed item of material or equipment will be considered functionally equal to an item so named if:

a. in the exercise of reasonable judgment Engineer determines that:

1) it is at least equal in materials of construction, quality, durability, appearance, strength, and design characteristics;

2) it will reliably perform at least equally well the function and achieve the results imposed by the design concept of the completed Project as a functioning whole;

3) it has a proven record of performance and availability of responsive service; and

4) it is not objectionable to Owner.

b. Contractor certifies that, if approved and incorporated into the Work:

1) there will be no increase in cost to the Owner or increase in Contract Times; and

2) it will conform substantially to the detailed requirements of the item named in the Contract Documents.

B. *Contractor's Expense*: Contractor shall provide all data in support of any proposed "or equal" item at Contractor's expense.

C. *Engineer's Evaluation and Determination*: Engineer will be allowed a reasonable time to evaluate each "or-equal" request. Engineer may require Contractor to furnish additional data about the proposed "or-equal" item. Engineer will be the sole judge of acceptability. No "or-equal" item will be ordered, furnished, installed, or utilized until Engineer's review is complete and Engineer determines that the proposed item is an "or-equal", which will be evidenced by an approved Shop Drawing or other written communication. Engineer will advise Contractor in writing of any negative determination.

D. *Effect of Engineer's Determination*: Neither approval nor denial of an "or-equal" request shall result in any change in Contract Price. The Engineer's denial of an "or-equal" request shall be final and binding, and may not be reversed through an appeal under any provision of the Contract Documents.

Copyright © 2013 National Society of Professional Engineers, American Council of Engineering Companies, and American Society of Civil Engineers. All rights reserved.

E. *Treatment as a Substitution Request*: If Engineer determines that an item of material or equipment proposed by Contractor does not qualify as an "or-equal" item, Contractor may request that Engineer considered the proposed item as a substitute pursuant to Paragraph 7.05.

7.05 *Substitutes*

A. Unless the specification or description of an item of material or equipment required to be furnished under the Contract Documents contains or is followed by words reading that no substitution is permitted, Contractor may request that Engineer authorize the use of other items of material or equipment under the circumstances described below. To the extent possible such requests shall be made before commencement of related construction at the Site.

1. Contractor shall submit sufficient information as provided below to allow Engineer to determine if the item of material or equipment proposed is functionally equivalent to that named and an acceptable substitute therefor. Engineer will not accept requests for review of proposed substitute items of material or equipment from anyone other than Contractor.

2. The requirements for review by Engineer will be as set forth in Paragraph 7.05.B, as supplemented by the Specifications, and as Engineer may decide is appropriate under the circumstances.

3. Contractor shall make written application to Engineer for review of a proposed substitute item of material or equipment that Contractor seeks to furnish or use. The application:

a. shall certify that the proposed substitute item will:

1) perform adequately the functions and achieve the results called for by the general design,

2) be similar in substance to that specified, and

3) be suited to the same use as that specified.

b. will state:

1) the extent, if any, to which the use of the proposed substitute item will necessitate a change in Contract Times,

2) whether use of the proposed substitute item in the Work will require a change in any of the Contract Documents (or in the provisions of any other direct contract with Owner for other work on the Project) to adapt the design to the proposed substitute item, and

3) whether incorporation or use of the proposed substitute item in connection with the Work is subject to payment of any license fee or royalty.

c. will identify:

1) all variations of the proposed substitute item from that specified, and

2) available engineering, sales, maintenance, repair, and replacement services.

d. shall contain an itemized estimate of all costs or credits that will result directly or indirectly from use of such substitute item, including but not limited to changes in Contract Price, shared savings, costs of redesign, and claims of other contractors affected by any resulting change.

B. *Engineer's Evaluation and Determination*: Engineer will be allowed a reasonable time to evaluate each substitute request, and to obtain comments and direction from Owner. Engineer may require Contractor to furnish additional data about the proposed substitute item. Engineer will be the sole judge of acceptability. No substitute will be ordered, furnished, installed, or utilized until Engineer's review is complete and Engineer determines that the proposed item is an acceptable substitute. Engineer's determination will be evidenced by a Field Order or a

Copyright © 2013 National Society of Professional Engineers, American Council of Engineering Companies, and American Society of Civil Engineers. All rights reserved.

proposed Change Order accounting for the substitution itself and all related impacts, including changes in Contract Price or Contract Times. Engineer will advise Contractor in writing of any negative determination.

C. *Special Guarantee*: Owner may require Contractor to furnish at Contractor's expense a special performance guarantee or other surety with respect to any substitute.

D. *Reimbursement of Engineer's Cost*: Engineer will record Engineer's costs in evaluating a substitute proposed or submitted by Contractor. Whether or not Engineer approves a substitute so proposed or submitted by Contractor, Contractor shall reimburse Owner for the reasonable charges of Engineer for evaluating each such proposed substitute. Contractor shall also reimburse Owner for the reasonable charges of Engineer for making changes in the Contract Documents (or in the provisions of any other direct contract with Owner) resulting from the acceptance of each proposed substitute.

E. *Contractor's Expense*: Contractor shall provide all data in support of any proposed substitute at Contractor's expense.

F. *Effect of Engineer's Determination*: If Engineer approves the substitution request, Contractor shall execute the proposed Change Order and proceed with the substitution. The Engineer's denial of a substitution request shall be final and binding, and may not be reversed through an appeal under any provision of the Contract Documents. Contractor may challenge the scope of reimbursement costs imposed under Paragraph 7.05.D, by timely submittal of a Change Proposal.

7.06 *Concerning Subcontractors, Suppliers, and Others*

A. Contractor may retain Subcontractors and Suppliers for the performance of parts of the Work. Such Subcontractors and Suppliers must be acceptable to Owner.

B. Contractor shall retain specific Subcontractors, Suppliers, or other individuals or entities for the performance of designated parts of the Work if required by the Contract to do so.

C. Subsequent to the submittal of Contractor's Bid or final negotiation of the terms of the Contract, Owner may not require Contractor to retain any Subcontractor, Supplier, or other individual or entity to furnish or perform any of the Work against which Contractor has reasonable objection.

D. Prior to entry into any binding subcontract or purchase order, Contractor shall submit to Owner the identity of the proposed Subcontractor or Supplier (unless Owner has already deemed such proposed Subcontractor or Supplier acceptable, during the bidding process or otherwise). Such proposed Subcontractor or Supplier shall be deemed acceptable to Owner unless Owner raises a substantive, reasonable objection within five days.

E. Owner may require the replacement of any Subcontractor, Supplier, or other individual or entity retained by Contractor to perform any part of the Work. Owner also may require Contractor to retain specific replacements; provided, however, that Owner may not require a replacement to which Contractor has a reasonable objection. If Contractor has submitted the identity of certain Subcontractors, Suppliers, or other individuals or entities for acceptance by Owner, and Owner has accepted it (either in writing or by failing to make written objection thereto), then Owner may subsequently revoke the acceptance of any such Subcontractor, Supplier, or other individual or entity so identified solely on the basis of substantive, reasonable objection after due investigation. Contractor shall submit an acceptable replacement for the rejected Subcontractor, Supplier, or other individual or entity.

F. If Owner requires the replacement of any Subcontractor, Supplier, or other individual or entity retained by Contractor to perform any part of the Work, then Contractor shall be entitled to an adjustment in Contract Price or Contract Times, or both, with respect to the replacement; and

Copyright © 2013 National Society of Professional Engineers, American Council of Engineering Companies, and American Society of Civil Engineers. All rights reserved.

Contractor shall initiate a Change Proposal for such adjustment within 30 days of Owner's requirement of replacement.

G. No acceptance by Owner of any such Subcontractor, Supplier, or other individual or entity, whether initially or as a replacement, shall constitute a waiver of the right of Owner to the completion of the Work in accordance with the Contract Documents.

H. On a monthly basis Contractor shall submit to Engineer a complete list of all Subcontractors and Suppliers having a direct contract with Contractor, and of all other Subcontractors and Suppliers known to Contractor at the time of submittal.

I. Contractor shall be fully responsible to Owner and Engineer for all acts and omissions of the Subcontractors, Suppliers, and other individuals or entities performing or furnishing any of the Work just as Contractor is responsible for Contractor's own acts and omissions.

J. Contractor shall be solely responsible for scheduling and coordinating the work of Subcontractors, Suppliers, and all other individuals or entities performing or furnishing any of the Work.

K. Contractor shall restrict all Subcontractors, Suppliers, and such other individuals or entities performing or furnishing any of the Work from communicating with Engineer or Owner, except through Contractor or in case of an emergency, or as otherwise expressly allowed herein.

L. The divisions and sections of the Specifications and the identifications of any Drawings shall not control Contractor in dividing the Work among Subcontractors or Suppliers or delineating the Work to be performed by any specific trade.

M. All Work performed for Contractor by a Subcontractor or Supplier shall be pursuant to an appropriate contractual agreement that specifically binds the Subcontractor or Supplier to the applicable terms and conditions of the Contract Documents for the benefit of Owner and Engineer.

N. Owner may furnish to any Subcontractor or Supplier, to the extent practicable, information about amounts paid to Contractor on account of Work performed for Contractor by the particular Subcontractor or Supplier.

O. Nothing in the Contract Documents:

1. shall create for the benefit of any such Subcontractor, Supplier, or other individual or entity any contractual relationship between Owner or Engineer and any such Subcontractor, Supplier, or other individual or entity; nor

2. shall create any obligation on the part of Owner or Engineer to pay or to see to the payment of any money due any such Subcontractor, Supplier, or other individual or entity except as may otherwise be required by Laws and Regulations.

7.07 *Patent Fees and Royalties*

A. Contractor shall pay all license fees and royalties and assume all costs incident to the use in the performance of the Work or the incorporation in the Work of any invention, design, process, product, or device which is the subject of patent rights or copyrights held by others. If a particular invention, design, process, product, or device is specified in the Contract Documents for use in the performance of the Work and if, to the actual knowledge of Owner or Engineer, its use is subject to patent rights or copyrights calling for the payment of any license fee or royalty to others, the existence of such rights shall be disclosed by Owner in the Contract Documents.

B. To the fullest extent permitted by Laws and Regulations, Owner shall indemnify and hold harmless Contractor, and its officers, directors, members, partners, employees, agents,

Copyright © 2013 National Society of Professional Engineers, American Council of Engineering Companies, and American Society of Civil Engineers. All rights reserved.

consultants, and subcontractors from and against all claims, costs, losses, and damages (including but not limited to all fees and charges of engineers, architects, attorneys, and other professionals, and all court or arbitration or other dispute resolution costs) arising out of or relating to any infringement of patent rights or copyrights incident to the use in the performance of the Work or resulting from the incorporation in the Work of any invention, design, process, product, or device specified in the Contract Documents, but not identified as being subject to payment of any license fee or royalty to others required by patent rights or copyrights.

C. To the fullest extent permitted by Laws and Regulations, Contractor shall indemnify and hold harmless Owner and Engineer, and the officers, directors, members, partners, employees, agents, consultants and subcontractors of each and any of them from and against all claims, costs, losses, and damages (including but not limited to all fees and charges of engineers, architects, attorneys, and other professionals and all court or arbitration or other dispute resolution costs) arising out of or relating to any infringement of patent rights or copyrights incident to the use in the performance of the Work or resulting from the incorporation in the Work of any invention, design, process, product, or device not specified in the Contract Documents.

7.08 *Permits*

A. Unless otherwise provided in the Contract Documents, Contractor shall obtain and pay for all construction permits and licenses. Owner shall assist Contractor, when necessary, in obtaining such permits and licenses. Contractor shall pay all governmental charges and inspection fees necessary for the prosecution of the Work which are applicable at the time of the submission of Contractor's Bid (or when Contractor became bound under a negotiated contract). Owner shall pay all charges of utility owners for connections for providing permanent service to the Work

7.09 *Taxes*

A. Contractor shall pay all sales, consumer, use, and other similar taxes required to be paid by Contractor in accordance with the Laws and Regulations of the place of the Project which are applicable during the performance of the Work.

7.10 *Laws and Regulations*

A. Contractor shall give all notices required by and shall comply with all Laws and Regulations applicable to the performance of the Work. Except where otherwise expressly required by applicable Laws and Regulations, neither Owner nor Engineer shall be responsible for monitoring Contractor's compliance with any Laws or Regulations.

B. If Contractor performs any Work or takes any other action knowing or having reason to know that it is contrary to Laws or Regulations, Contractor shall bear all resulting costs and losses, and shall indemnify and hold harmless Owner and Engineer, and the officers, directors, members, partners, employees, agents, consultants, and subcontractors of each and any of them from and against all claims, costs, losses, and damages (including but not limited to all fees and charges of engineers, architects, attorneys, and other professionals and all court or arbitration or other dispute resolution costs) arising out of or relating to such Work or other action. It shall not be Contractor's responsibility to make certain that the Work described in the Contract Documents is in accordance with Laws and Regulations, but this shall not relieve Contractor of Contractor's obligations under Paragraph 3.03.

C. Owner or Contractor may give notice to the other party of any changes after the submission of Contractor's Bid (or after the date when Contractor became bound under a negotiated contract) in Laws or Regulations having an effect on the cost or time of performance of the Work, including but not limited to changes in Laws or Regulations having an effect on

Copyright © 2013 National Society of Professional Engineers, American Council of Engineering Companies, and American Society of Civil Engineers. All rights reserved.

procuring permits and on sales, use, value-added, consumption, and other similar taxes. If Owner and Contractor are unable to agree on entitlement to or on the amount or extent, if any, of any adjustment in Contract Price or Contract Times resulting from such changes, then within 30 days of such notice Contractor may submit a Change Proposal, or Owner may initiate a Claim.

7.11 *Record Documents*

A. Contractor shall maintain in a safe place at the Site one printed record copy of all Drawings, Specifications, Addenda, Change Orders, Work Change Directives, Field Orders, written interpretations and clarifications, and approved Shop Drawings. Contractor shall keep such record documents in good order and annotate them to show changes made during construction. These record documents, together with all approved Samples, will be available to Engineer for reference. Upon completion of the Work, Contractor shall deliver these record documents to Engineer.

7.12 *Safety and Protection*

A. Contractor shall be solely responsible for initiating, maintaining, and supervising all safety precautions and programs in connection with the Work. Such responsibility does not relieve Subcontractors of their responsibility for the safety of persons or property in the performance of their work, nor for compliance with applicable safety Laws and Regulations. Contractor shall take all necessary precautions for the safety of, and shall provide the necessary protection to prevent damage, injury, or loss to:

1. all persons on the Site or who may be affected by the Work;
2. all the Work and materials and equipment to be incorporated therein, whether in storage on or off the Site; and
3. other property at the Site or adjacent thereto, including trees, shrubs, lawns, walks, pavements, roadways, structures, other work in progress, utilities, and Underground Facilities not designated for removal, relocation, or replacement in the course of construction.

B. Contractor shall comply with all applicable Laws and Regulations relating to the safety of persons or property, or to the protection of persons or property from damage, injury, or loss; and shall erect and maintain all necessary safeguards for such safety and protection. Contractor shall notify Owner; the owners of adjacent property, Underground Facilities, and other utilities; and other contractors and utility owners performing work at or adjacent to the Site, when prosecution of the Work may affect them, and shall cooperate with them in the protection, removal, relocation, and replacement of their property or work in progress.

C. Contractor shall comply with the applicable requirements of Owner's safety programs, if any. The Supplementary Conditions identify any Owner's safety programs that are applicable to the Work.

D. Contractor shall inform Owner and Engineer of the specific requirements of Contractor's safety program with which Owner's and Engineer's employees and representatives must comply while at the Site.

E. All damage, injury, or loss to any property referred to in Paragraph 7.12.A.2 or 7.12.A.3 caused, directly or indirectly, in whole or in part, by Contractor, any Subcontractor, Supplier, or any other individual or entity directly or indirectly employed by any of them to perform any of the Work, or anyone for whose acts any of them may be liable, shall be remedied by Contractor at its expense (except damage or loss attributable to the fault of Drawings or Specifications or to the acts or omissions of Owner or Engineer or anyone employed by any of them, or anyone for whose acts any of them may be liable, and not attributable, directly or

Copyright © 2013 National Society of Professional Engineers, American Council of Engineering Companies, and American Society of Civil Engineers. All rights reserved.

indirectly, in whole or in part, to the fault or negligence of Contractor or any Subcontractor, Supplier, or other individual or entity directly or indirectly employed by any of them).

F. Contractor's duties and responsibilities for safety and protection shall continue until such time as all the Work is completed and Engineer has issued a notice to Owner and Contractor in accordance with Paragraph 15.06.B that the Work is acceptable (except as otherwise expressly provided in connection with Substantial Completion).

G. Contractor's duties and responsibilities for safety and protection shall resume whenever Contractor or any Subcontractor or Supplier returns to the Site to fulfill warranty or correction obligations, or to conduct other tasks arising from the Contract Documents.

7.13 *Safety Representative*

A. Contractor shall designate a qualified and experienced safety representative at the Site whose duties and responsibilities shall be the prevention of accidents and the maintaining and supervising of safety precautions and programs.

7.14 *Hazard Communication Programs*

A. Contractor shall be responsible for coordinating any exchange of material safety data sheets or other hazard communication information required to be made available to or exchanged between or among employers at the Site in accordance with Laws or Regulations.

7.15 *Emergencies*

A. In emergencies affecting the safety or protection of persons or the Work or property at the Site or adjacent thereto, Contractor is obligated to act to prevent threatened damage, injury, or loss. Contractor shall give Engineer prompt written notice if Contractor believes that any significant changes in the Work or variations from the Contract Documents have been caused thereby or are required as a result thereof. If Engineer determines that a change in the Contract Documents is required because of the action taken by Contractor in response to such an emergency, a Work Change Directive or Change Order will be issued.

7.16 *Shop Drawings, Samples, and Other Submittals*

A. *Shop Drawing and Sample Submittal Requirements*:

1. Before submitting a Shop Drawing or Sample, Contractor shall have:

a. reviewed and coordinated the Shop Drawing or Sample with other Shop Drawings and Samples and with the requirements of the Work and the Contract Documents;

b. determined and verified all field measurements, quantities, dimensions, specified performance and design criteria, installation requirements, materials, catalog numbers, and similar information with respect thereto;

c. determined and verified the suitability of all materials and equipment offered with respect to the indicated application, fabrication, shipping, handling, storage, assembly, and installation pertaining to the performance of the Work; and

d. determined and verified all information relative to Contractor's responsibilities for means, methods, techniques, sequences, and procedures of construction, and safety precautions and programs incident thereto.

2. Each submittal shall bear a stamp or specific written certification that Contractor has satisfied Contractor's obligations under the Contract Documents with respect to Contractor's review of that submittal, and that Contractor approves the submittal.

3. With each submittal, Contractor shall give Engineer specific written notice of any variations that the Shop Drawing or Sample may have from the requirements of the

Copyright © 2013 National Society of Professional Engineers, American Council of Engineering Companies, and American Society of Civil Engineers. All rights reserved.

Contract Documents. This notice shall be set forth in a written communication separate from the Shop Drawings or Sample submittal; and, in addition, in the case of Shop Drawings by a specific notation made on each Shop Drawing submitted to Engineer for review and approval of each such variation.

B. *Submittal Procedures for Shop Drawings and Samples*: Contractor shall submit Shop Drawings and Samples to Engineer for review and approval in accordance with the accepted Schedule of Submittals. Each submittal will be identified as Engineer may require.

1. *Shop Drawings*:

a. Contractor shall submit the number of copies required in the Specifications.

b. Data shown on the Shop Drawings will be complete with respect to quantities, dimensions, specified performance and design criteria, materials, and similar data to show Engineer the services, materials, and equipment Contractor proposes to provide and to enable Engineer to review the information for the limited purposes required by Paragraph 7.16.D.

2. *Samples*:

a. Contractor shall submit the number of Samples required in the Specifications.

b. Contractor shall clearly identify each Sample as to material, Supplier, pertinent data such as catalog numbers, the use for which intended and other data as Engineer may require to enable Engineer to review the submittal for the limited purposes required by Paragraph 7.16.D.

3. Where a Shop Drawing or Sample is required by the Contract Documents or the Schedule of Submittals, any related Work performed prior to Engineer's review and approval of the pertinent submittal will be at the sole expense and responsibility of Contractor.

C. *Other Submittals*: Contractor shall submit other submittals to Engineer in accordance with the accepted Schedule of Submittals, and pursuant to the applicable terms of the Specifications.

D. *Engineer's Review*:

1. Engineer will provide timely review of Shop Drawings and Samples in accordance with the Schedule of Submittals acceptable to Engineer. Engineer's review and approval will be only to determine if the items covered by the submittals will, after installation or incorporation in the Work, conform to the information given in the Contract Documents and be compatible with the design concept of the completed Project as a functioning whole as indicated by the Contract Documents.

2. Engineer's review and approval will not extend to means, methods, techniques, sequences, or procedures of construction or to safety precautions or programs incident thereto.

3. Engineer's review and approval of a separate item as such will not indicate approval of the assembly in which the item functions.

4. Engineer's review and approval of a Shop Drawing or Sample shall not relieve Contractor from responsibility for any variation from the requirements of the Contract Documents unless Contractor has complied with the requirements of Paragraph 7.16.A.3 and Engineer has given written approval of each such variation by specific written notation thereof incorporated in or accompanying the Shop Drawing or Sample. Engineer will document any such approved variation from the requirements of the Contract Documents in a Field Order.

Copyright © 2013 National Society of Professional Engineers, American Council of Engineering Companies, and American Society of Civil Engineers. All rights reserved.

5. Engineer's review and approval of a Shop Drawing or Sample shall not relieve Contractor from responsibility for complying with the requirements of Paragraph 7.16.A and B.

6. Engineer's review and approval of a Shop Drawing or Sample, or of a variation from the requirements of the Contract Documents, shall not, under any circumstances, change the Contract Times or Contract Price, unless such changes are included in a Change Order.

7. Neither Engineer's receipt, review, acceptance or approval of a Shop Drawing, Sample, or other submittal shall result in such item becoming a Contract Document.

8. Contractor shall perform the Work in compliance with the requirements and commitments set forth in approved Shop Drawings and Samples, subject to the provisions of Paragraph 7.16.D.4.

E. *Resubmittal Procedures*:

1. Contractor shall make corrections required by Engineer and shall return the required number of corrected copies of Shop Drawings and submit, as required, new Samples for review and approval. Contractor shall direct specific attention in writing to revisions other than the corrections called for by Engineer on previous submittals.

2. Contractor shall furnish required submittals with sufficient information and accuracy to obtain required approval of an item with no more than three submittals. Engineer will record Engineer's time for reviewing a fourth or subsequent submittal of a Shop Drawings, sample, or other item requiring approval, and Contractor shall be responsible for Engineer's charges to Owner for such time. Owner may impose a set-off against payments due to Contractor to secure reimbursement for such charges.

3. If Contractor requests a change of a previously approved submittal item, Contractor shall be responsible for Engineer's charges to Owner for its review time, and Owner may impose a set-off against payments due to Contractor to secure reimbursement for such charges, unless the need for such change is beyond the control of Contractor.

7.17 *Contractor's General Warranty and Guarantee*

A. Contractor warrants and guarantees to Owner that all Work will be in accordance with the Contract Documents and will not be defective. Engineer and its officers, directors, members, partners, employees, agents, consultants, and subcontractors shall be entitled to rely on Contractor's warranty and guarantee.

B. Contractor's warranty and guarantee hereunder excludes defects or damage caused by:

1. abuse, modification, or improper maintenance or operation by persons other than Contractor, Subcontractors, Suppliers, or any other individual or entity for whom Contractor is responsible; or

2. normal wear and tear under normal usage.

Copyright © 2013 National Society of Professional Engineers, American Council of Engineering Companies, and American Society of Civil Engineers. All rights reserved.

C. Contractor's obligation to perform and complete the Work in accordance with the Contract Documents shall be absolute. None of the following will constitute an acceptance of Work that is not in accordance with the Contract Documents or a release of Contractor's obligation to perform the Work in accordance with the Contract Documents:

1. observations by Engineer;
2. recommendation by Engineer or payment by Owner of any progress or final payment;
3. the issuance of a certificate of Substantial Completion by Engineer or any payment related thereto by Owner;
4. use or occupancy of the Work or any part thereof by Owner;
5. any review and approval of a Shop Drawing or Sample submittal;
6. the issuance of a notice of acceptability by Engineer;
7. any inspection, test, or approval by others; or
8. any correction of defective Work by Owner.

D. If the Contract requires the Contractor to accept the assignment of a contract entered into by Owner, then the specific warranties, guarantees, and correction obligations contained in the assigned contract shall govern with respect to Contractor's performance obligations to Owner for the Work described in the assigned contract.

7.18 *Indemnification*

A. To the fullest extent permitted by Laws and Regulations, and in addition to any other obligations of Contractor under the Contract or otherwise, Contractor shall indemnify and hold harmless Owner and Engineer, and the officers, directors, members, partners, employees, agents, consultants and subcontractors of each and any of them from and against all claims, costs, losses, and damages (including but not limited to all fees and charges of engineers, architects, attorneys, and other professionals and all court or arbitration or other dispute resolution costs) arising out of or relating to the performance of the Work, provided that any such claim, cost, loss, or damage is attributable to bodily injury, sickness, disease, or death, or to injury to or destruction of tangible property (other than the Work itself), including the loss of use resulting therefrom but only to the extent caused by any negligent act or omission of Contractor, any Subcontractor, any Supplier, or any individual or entity directly or indirectly employed by any of them to perform any of the Work or anyone for whose acts any of them may be liable.

B. In any and all claims against Owner or Engineer or any of their officers, directors, members, partners, employees, agents, consultants, or subcontractors by any employee (or the survivor or personal representative of such employee) of Contractor, any Subcontractor, any Supplier, or any individual or entity directly or indirectly employed by any of them to perform any of the Work, or anyone for whose acts any of them may be liable, the indemnification obligation under Paragraph 7.18.A shall not be limited in any way by any limitation on the amount or type of damages, compensation, or benefits payable by or for Contractor or any such Subcontractor, Supplier, or other individual or entity under workers' compensation acts, disability benefit acts, or other employee benefit acts.

C. The indemnification obligations of Contractor under Paragraph 7.18.A shall not extend to the liability of Engineer and Engineer's officers, directors, members, partners, employees, agents, consultants and subcontractors arising out of:

1. the preparation or approval of, or the failure to prepare or approve maps, Drawings, opinions, reports, surveys, Change Orders, designs, or Specifications; or
2. giving directions or instructions, or failing to give them, if that is the primary cause of the injury or damage.

Copyright © 2013 National Society of Professional Engineers, American Council of Engineering Companies, and American Society of Civil Engineers. All rights reserved.

7.19 *Delegation of Professional Design Services*

A. Contractor will not be required to provide professional design services unless such services are specifically required by the Contract Documents for a portion of the Work or unless such services are required to carry out Contractor's responsibilities for construction means, methods, techniques, sequences and procedures. Contractor shall not be required to provide professional services in violation of applicable Laws and Regulations.

B. If professional design services or certifications by a design professional related to systems, materials, or equipment are specifically required of Contractor by the Contract Documents, Owner and Engineer will specify all performance and design criteria that such services must satisfy. Contractor shall cause such services or certifications to be provided by a properly licensed professional, whose signature and seal shall appear on all drawings, calculations, specifications, certifications, and other submittals prepared by such professional. Shop Drawings and other submittals related to the Work designed or certified by such professional, if prepared by others, shall bear such professional's written approval when submitted to Engineer.

C. Owner and Engineer shall be entitled to rely upon the adequacy, accuracy, and completeness of the services, certifications, or approvals performed by such design professionals, provided Owner and Engineer have specified to Contractor all performance and design criteria that such services must satisfy.

D. Pursuant to this paragraph, Engineer's review and approval of design calculations and design drawings will be only for the limited purpose of checking for conformance with performance and design criteria given and the design concept expressed in the Contract Documents. Engineer's review and approval of Shop Drawings and other submittals (except design calculations and design drawings) will be only for the purpose stated in Paragraph 7.16.D.1.

E. Contractor shall not be responsible for the adequacy of the performance or design criteria specified by Owner or Engineer.

ARTICLE 8 – OTHER WORK AT THE SITE

8.01 *Other Work*

A. In addition to and apart from the Work under the Contract Documents, the Owner may perform other work at or adjacent to the Site. Such other work may be performed by Owner's employees, or through contracts between the Owner and third parties. Owner may also arrange to have third-party utility owners perform work on their utilities and facilities at or adjacent to the Site.

B. If Owner performs other work at or adjacent to the Site with Owner's employees, or through contracts for such other work, then Owner shall give Contractor written notice thereof prior to starting any such other work. If Owner has advance information regarding the start of any utility work at or adjacent to the Site, Owner shall provide such information to Contractor.

C. Contractor shall afford each other contractor that performs such other work, each utility owner performing other work, and Owner, if Owner is performing other work with Owner's employees, proper and safe access to the Site, and provide a reasonable opportunity for the introduction and storage of materials and equipment and the execution of such other work. Contractor shall do all cutting, fitting, and patching of the Work that may be required to properly connect or otherwise make its several parts come together and properly integrate with such other work. Contractor shall not endanger any work of others by cutting, excavating, or otherwise altering such work; provided, however, that Contractor may cut or alter others' work with the written consent of Engineer and the others whose work will be affected.

Copyright © 2013 National Society of Professional Engineers, American Council of Engineering Companies, and American Society of Civil Engineers. All rights reserved.

D. If the proper execution or results of any part of Contractor's Work depends upon work performed by others under this Article 8, Contractor shall inspect such other work and promptly report to Engineer in writing any delays, defects, or deficiencies in such other work that render it unavailable or unsuitable for the proper execution and results of Contractor's Work. Contractor's failure to so report will constitute an acceptance of such other work as fit and proper for integration with Contractor's Work except for latent defects and deficiencies in such other work.

8.02 *Coordination*

A. If Owner intends to contract with others for the performance of other work at or adjacent to the Site, to perform other work at or adjacent to the Site with Owner's employees, or to arrange to have utility owners perform work at or adjacent to the Site, the following will be set forth in the Supplementary Conditions or provided to Contractor prior to the start of any such other work:

1. The identity of the individual or entity that will have authority and responsibility for coordination of the activities among the various contractors;
2. An itemization of the specific matters to be covered by such authority and responsibility; and
3. The extent of such authority and responsibilities.

B. Unless otherwise provided in the Supplementary Conditions, Owner shall have sole authority and responsibility for such coordination.

8.03 *Legal Relationships*

A. If, in the course of performing other work at or adjacent to the Site for Owner, the Owner's employees, any other contractor working for Owner, or any utility owner causes damage to the Work or to the property of Contractor or its Subcontractors, or delays, disrupts, interferes with, or increases the scope or cost of the performance of the Work, through actions or inaction, then Contractor shall be entitled to an equitable adjustment in the Contract Price or the Contract Times, or both. Contractor must submit any Change Proposal seeking an equitable adjustment in the Contract Price or the Contract Times under this paragraph within 30 days of the damaging, delaying, disrupting, or interfering event. The entitlement to, and extent of, any such equitable adjustment shall take into account information (if any) regarding such other work that was provided to Contractor in the Contract Documents prior to the submittal of the Bid or the final negotiation of the terms of the Contract. When applicable, any such equitable adjustment in Contract Price shall be conditioned on Contractor assigning to Owner all Contractor's rights against such other contractor or utility owner with respect to the damage, delay, disruption, or interference that is the subject of the adjustment. Contractor's entitlement to an adjustment of the Contract Times is conditioned on such adjustment being essential to Contractor's ability to complete the Work within the Contract Times.

B. Contractor shall take reasonable and customary measures to avoid damaging, delaying, disrupting, or interfering with the work of Owner, any other contractor, or any utility owner performing other work at or adjacent to the Site. If Contractor fails to take such measures and as a result damages, delays, disrupts, or interferes with the work of any such other contractor or utility owner, then Owner may impose a set-off against payments due to Contractor, and assign to such other contractor or utility owner the Owner's contractual rights against Contractor with respect to the breach of the obligations set forth in this paragraph.

Copyright © 2013 National Society of Professional Engineers, American Council of Engineering Companies, and American Society of Civil Engineers. All rights reserved.

C. When Owner is performing other work at or adjacent to the Site with Owner's employees, Contractor shall be liable to Owner for damage to such other work, and for the reasonable direct delay, disruption, and interference costs incurred by Owner as a result of Contractor's failure to take reasonable and customary measures with respect to Owner's other work. In response to such damage, delay, disruption, or interference, Owner may impose a set-off against payments due to Contractor.

D. If Contractor damages, delays, disrupts, or interferes with the work of any other contractor, or any utility owner performing other work at or adjacent to the Site, through Contractor's failure to take reasonable and customary measures to avoid such impacts, or if any claim arising out of Contractor's actions, inactions, or negligence in performance of the Work at or adjacent to the Site is made by any such other contractor or utility owner against Contractor, Owner, or Engineer, then Contractor shall (1) promptly attempt to settle the claim as to all parties through negotiations with such other contractor or utility owner, or otherwise resolve the claim by arbitration or other dispute resolution proceeding or at law, and (2) indemnify and hold harmless Owner and Engineer, and the officers, directors, members, partners, employees, agents, consultants and subcontractors of each and any of them from and against any such claims, and against all costs, losses, and damages (including but not limited to all fees and charges of engineers, architects, attorneys, and other professionals and all court or arbitration or other dispute resolution costs) arising out of or relating to such damage, delay, disruption, or interference.

ARTICLE 9 – OWNER'S RESPONSIBILITIES

9.01 *Communications to Contractor*

A. Except as otherwise provided in these General Conditions, Owner shall issue all communications to Contractor through Engineer.

9.02 *Replacement of Engineer*

A. Owner may at its discretion appoint an engineer to replace Engineer, provided Contractor makes no reasonable objection to the replacement engineer. The replacement engineer's status under the Contract Documents shall be that of the former Engineer.

9.03 *Furnish Data*

A. Owner shall promptly furnish the data required of Owner under the Contract Documents.

9.04 *Pay When Due*

A. Owner shall make payments to Contractor when they are due as provided in the Agreement.

9.05 *Lands and Easements; Reports, Tests, and Drawings*

A. Owner's duties with respect to providing lands and easements are set forth in Paragraph 5.01.

B. Owner's duties with respect to providing engineering surveys to establish reference points are set forth in Paragraph 4.03.

C. Article 5 refers to Owner's identifying and making available to Contractor copies of reports of explorations and tests of conditions at the Site, and drawings of physical conditions relating to existing surface or subsurface structures at the Site.

9.06 *Insurance*

A. Owner's responsibilities, if any, with respect to purchasing and maintaining liability and property insurance are set forth in Article 6.

Copyright © 2013 National Society of Professional Engineers, American Council of Engineering Companies, and American Society of Civil Engineers. All rights reserved.

9.07 *Change Orders*

A. Owner's responsibilities with respect to Change Orders are set forth in Article 11.

9.08 *Inspections, Tests, and Approvals*

A. Owner's responsibility with respect to certain inspections, tests, and approvals is set forth in Paragraph 14.02.B.

9.09 *Limitations on Owner's Responsibilities*

A. The Owner shall not supervise, direct, or have control or authority over, nor be responsible for, Contractor's means, methods, techniques, sequences, or procedures of construction, or the safety precautions and programs incident thereto, or for any failure of Contractor to comply with Laws and Regulations applicable to the performance of the Work. Owner will not be responsible for Contractor's failure to perform the Work in accordance with the Contract Documents.

9.10 *Undisclosed Hazardous Environmental Condition*

A. Owner's responsibility in respect to an undisclosed Hazardous Environmental Condition is set forth in Paragraph 5.06.

9.11 *Evidence of Financial Arrangements*

A. Upon request of Contractor, Owner shall furnish Contractor reasonable evidence that financial arrangements have been made to satisfy Owner's obligations under the Contract Documents (including obligations under proposed changes in the Work).

9.12 *Safety Programs*

A. While at the Site, Owner's employees and representatives shall comply with the specific applicable requirements of Contractor's safety programs of which Owner has been informed.

B. Owner shall furnish copies of any applicable Owner safety programs to Contractor.

ARTICLE 10 – ENGINEER'S STATUS DURING CONSTRUCTION

10.01 *Owner's Representative*

A. Engineer will be Owner's representative during the construction period. The duties and responsibilities and the limitations of authority of Engineer as Owner's representative during construction are set forth in the Contract.

10.02 *Visits to Site*

A. Engineer will make visits to the Site at intervals appropriate to the various stages of construction as Engineer deems necessary in order to observe as an experienced and qualified design professional the progress that has been made and the quality of the various aspects of Contractor's executed Work. Based on information obtained during such visits and observations, Engineer, for the benefit of Owner, will determine, in general, if the Work is proceeding in accordance with the Contract Documents. Engineer will not be required to make exhaustive or continuous inspections on the Site to check the quality or quantity of the Work. Engineer's efforts will be directed toward providing for Owner a greater degree of confidence that the completed Work will conform generally to the Contract Documents. On the basis of such visits and observations, Engineer will keep Owner informed of the progress of the Work and will endeavor to guard Owner against defective Work.

B. Engineer's visits and observations are subject to all the limitations on Engineer's authority and responsibility set forth in Paragraph 10.08. Particularly, but without limitation, during or as a result of Engineer's visits or observations of Contractor's Work, Engineer will not

Copyright © 2013 National Society of Professional Engineers, American Council of Engineering Companies, and American Society of Civil Engineers. All rights reserved.

supervise, direct, control, or have authority over or be responsible for Contractor's means, methods, techniques, sequences, or procedures of construction, or the safety precautions and programs incident thereto, or for any failure of Contractor to comply with Laws and Regulations applicable to the performance of the Work.

10.03 *Project Representative*

A. If Owner and Engineer have agreed that Engineer will furnish a Resident Project Representative to represent Engineer at the Site and assist Engineer in observing the progress and quality of the Work, then the authority and responsibilities of any such Resident Project Representative will be as provided in the Supplementary Conditions, and limitations on the responsibilities thereof will be as provided in Paragraph 10.08. If Owner designates another representative or agent to represent Owner at the Site who is not Engineer's consultant, agent, or employee, the responsibilities and authority and limitations thereon of such other individual or entity will be as provided in the Supplementary Conditions.

10.04 *Rejecting Defective Work*

A. Engineer has the authority to reject Work in accordance with Article 14.

10.05 *Shop Drawings, Change Orders and Payments*

A. Engineer's authority, and limitations thereof, as to Shop Drawings and Samples, are set forth in Paragraph 7.16.

B. Engineer's authority, and limitations thereof, as to design calculations and design drawings submitted in response to a delegation of professional design services, if any, are set forth in Paragraph 7.19.

C. Engineer's authority as to Change Orders is set forth in Article 11.

D. Engineer's authority as to Applications for Payment is set forth in Article 15.

10.06 *Determinations for Unit Price Work*

A. Engineer will determine the actual quantities and classifications of Unit Price Work performed by Contractor as set forth in Paragraph 13.03.

10.07 *Decisions on Requirements of Contract Documents and Acceptability of Work*

A. Engineer will render decisions regarding the requirements of the Contract Documents, and judge the acceptability of the Work, pursuant to the specific procedures set forth herein for initial interpretations, Change Proposals, and acceptance of the Work. In rendering such decisions and judgments, Engineer will not show partiality to Owner or Contractor, and will not be liable to Owner, Contractor, or others in connection with any proceedings, interpretations, decisions, or judgments conducted or rendered in good faith.

10.08 *Limitations on Engineer's Authority and Responsibilities*

A. Neither Engineer's authority or responsibility under this Article 10 or under any other provision of the Contract, nor any decision made by Engineer in good faith either to exercise or not exercise such authority or responsibility or the undertaking, exercise, or performance of any authority or responsibility by Engineer, shall create, impose, or give rise to any duty in contract, tort, or otherwise owed by Engineer to Contractor, any Subcontractor, any Supplier, any other individual or entity, or to any surety for or employee or agent of any of them.

Copyright © 2013 National Society of Professional Engineers, American Council of Engineering Companies, and American Society of Civil Engineers. All rights reserved.

B. Engineer will not supervise, direct, control, or have authority over or be responsible for Contractor's means, methods, techniques, sequences, or procedures of construction, or the safety precautions and programs incident thereto, or for any failure of Contractor to comply with Laws and Regulations applicable to the performance of the Work. Engineer will not be responsible for Contractor's failure to perform the Work in accordance with the Contract Documents.

C. Engineer will not be responsible for the acts or omissions of Contractor or of any Subcontractor, any Supplier, or of any other individual or entity performing any of the Work.

D. Engineer's review of the final Application for Payment and accompanying documentation and all maintenance and operating instructions, schedules, guarantees, bonds, certificates of inspection, tests and approvals, and other documentation required to be delivered by Paragraph 15.06.A will only be to determine generally that their content complies with the requirements of, and in the case of certificates of inspections, tests, and approvals, that the results certified indicate compliance with the Contract Documents.

E. The limitations upon authority and responsibility set forth in this Paragraph 10.08 shall also apply to the Resident Project Representative, if any.

10.09 *Compliance with Safety Program*

A. While at the Site, Engineer's employees and representatives will comply with the specific applicable requirements of Owner's and Contractor's safety programs (if any) of which Engineer has been informed.

ARTICLE 11 – AMENDING THE CONTRACT DOCUMENTS; CHANGES IN THE WORK

11.01 *Amending and Supplementing Contract Documents*

A. The Contract Documents may be amended or supplemented by a Change Order, a Work Change Directive, or a Field Order.

1. *Change Orders*:

a. If an amendment or supplement to the Contract Documents includes a change in the Contract Price or the Contract Times, such amendment or supplement must be set forth in a Change Order. A Change Order also may be used to establish amendments and supplements of the Contract Documents that do not affect the Contract Price or Contract Times.

b. Owner and Contractor may amend those terms and conditions of the Contract Documents that do not involve (1) the performance or acceptability of the Work, (2) the design (as set forth in the Drawings, Specifications, or otherwise), or (3) other engineering or technical matters, without the recommendation of the Engineer. Such an amendment shall be set forth in a Change Order.

2. *Work Change Directives*: A Work Change Directive will not change the Contract Price or the Contract Times but is evidence that the parties expect that the modification ordered or documented by a Work Change Directive will be incorporated in a subsequently issued Change Order, following negotiations by the parties as to the Work Change Directive's effect, if any, on the Contract Price and Contract Times; or, if negotiations are unsuccessful, by a determination under the terms of the Contract Documents governing adjustments, expressly including Paragraph 11.04 regarding change of Contract Price. Contractor must submit any Change Proposal seeking an adjustment of the Contract Price or the Contract Times, or both, no later than 30 days after the completion of the Work set out in the Work Change Directive. Owner must submit any Claim seeking an adjustment of the Contract Price or the Contract Times, or both, no later than 60 days after issuance of the Work Change Directive.

Copyright © 2013 National Society of Professional Engineers, American Council of Engineering Companies, and American Society of Civil Engineers. All rights reserved.

3. *Field Orders*: Engineer may authorize minor changes in the Work if the changes do not involve an adjustment in the Contract Price or the Contract Times and are compatible with the design concept of the completed Project as a functioning whole as indicated by the Contract Documents. Such changes will be accomplished by a Field Order and will be binding on Owner and also on Contractor, which shall perform the Work involved promptly. If Contractor believes that a Field Order justifies an adjustment in the Contract Price or Contract Times, or both, then before proceeding with the Work at issue, Contractor shall submit a Change Proposal as provided herein.

11.02 *Owner-Authorized Changes in the Work*

A. Without invalidating the Contract and without notice to any surety, Owner may, at any time or from time to time, order additions, deletions, or revisions in the Work. Such changes shall be supported by Engineer's recommendation, to the extent the change involves the design (as set forth in the Drawings, Specifications, or otherwise), or other engineering or technical matters. Such changes may be accomplished by a Change Order, if Owner and Contractor have agreed as to the effect, if any, of the changes on Contract Times or Contract Price; or by a Work Change Directive. Upon receipt of any such document, Contractor shall promptly proceed with the Work involved; or, in the case of a deletion in the Work, promptly cease construction activities with respect to such deleted Work. Added or revised Work shall be performed under the applicable conditions of the Contract Documents. Nothing in this paragraph shall obligate Contractor to undertake work that Contractor reasonably concludes cannot be performed in a manner consistent with Contractor's safety obligations under the Contract Documents or Laws and Regulations.

11.03 *Unauthorized Changes in the Work*

A. Contractor shall not be entitled to an increase in the Contract Price or an extension of the Contract Times with respect to any work performed that is not required by the Contract Documents, as amended, modified, or supplemented, except in the case of an emergency as provided in Paragraph 7.15 or in the case of uncovering Work as provided in Paragraph 14.05.

11.04 *Change of Contract Price*

A. The Contract Price may only be changed by a Change Order. Any Change Proposal for an adjustment in the Contract Price shall comply with the provisions of Paragraph 11.06. Any Claim for an adjustment of Contract Price shall comply with the provisions of Article 12.

B. An adjustment in the Contract Price will be determined as follows:

1. where the Work involved is covered by unit prices contained in the Contract Documents, then by application of such unit prices to the quantities of the items involved (subject to the provisions of Paragraph 13.03); or

2. where the Work involved is not covered by unit prices contained in the Contract Documents, then by a mutually agreed lump sum (which may include an allowance for overhead and profit not necessarily in accordance with Paragraph 11.04.C.2); or

3. where the Work involved is not covered by unit prices contained in the Contract Documents and the parties do not reach mutual agreement to a lump sum, then on the basis of the Cost of the Work (determined as provided in Paragraph 13.01) plus a Contractor's fee for overhead and profit (determined as provided in Paragraph 11.04.C).

Copyright © 2013 National Society of Professional Engineers, American Council of Engineering Companies, and American Society of Civil Engineers. All rights reserved.

C. *Contractor's Fee*: When applicable, the Contractor's fee for overhead and profit shall be determined as follows:

1. a mutually acceptable fixed fee; or

2. if a fixed fee is not agreed upon, then a fee based on the following percentages of the various portions of the Cost of the Work:

a. for costs incurred under Paragraphs 13.01.B.1 and 13.01.B.2, the Contractor's fee shall be 15 percent;

b. for costs incurred under Paragraph 13.01.B.3, the Contractor's fee shall be five percent;

c. where one or more tiers of subcontracts are on the basis of Cost of the Work plus a fee and no fixed fee is agreed upon, the intent of Paragraphs 11.01.C.2.a and 11.01.C.2.b is that the Contractor's fee shall be based on: (1) a fee of 15 percent of the costs incurred under Paragraphs 13.01.A.1 and 13.01.A.2 by the Subcontractor that actually performs the Work, at whatever tier, and (2) with respect to Contractor itself and to any Subcontractors of a tier higher than that of the Subcontractor that actually performs the Work, a fee of five percent of the amount (fee plus underlying costs incurred) attributable to the next lower tier Subcontractor; provided, however, that for any such subcontracted work the maximum total fee to be paid by Owner shall be no greater than 27 percent of the costs incurred by the Subcontractor that actually performs the work;

d. no fee shall be payable on the basis of costs itemized under Paragraphs 13.01.B.4, 13.01.B.5, and 13.01.C;

e. the amount of credit to be allowed by Contractor to Owner for any change which results in a net decrease in cost will be the amount of the actual net decrease in cost plus a deduction in Contractor's fee by an amount equal to five percent of such net decrease; and

f. when both additions and credits are involved in any one change, the adjustment in Contractor's fee shall be computed on the basis of the net change in accordance with Paragraphs 11.04.C.2.a through 11.04.C.2.e, inclusive.

11.05 *Change of Contract Times*

A. The Contract Times may only be changed by a Change Order. Any Change Proposal for an adjustment in the Contract Times shall comply with the provisions of Paragraph 11.06. Any Claim for an adjustment in the Contract Times shall comply with the provisions of Article 12.

B. An adjustment of the Contract Times shall be subject to the limitations set forth in Paragraph 4.05, concerning delays in Contractor's progress.

Copyright © 2013 National Society of Professional Engineers, American Council of Engineering Companies, and American Society of Civil Engineers. All rights reserved.

11.06 *Change Proposals*

A. Contractor shall submit a Change Proposal to Engineer to request an adjustment in the Contract Times or Contract Price; appeal an initial decision by Engineer concerning the requirements of the Contract Documents or relating to the acceptability of the Work under the Contract Documents; contest a set-off against payment due; or seek other relief under the Contract. The Change Proposal shall specify any proposed change in Contract Times or Contract Price, or both, or other proposed relief, and explain the reason for the proposed change, with citations to any governing or applicable provisions of the Contract Documents.

1. *Procedures*: Contractor shall submit each Change Proposal to Engineer promptly (but in no event later than 30 days) after the start of the event giving rise thereto, or after such initial decision. The Contractor shall submit supporting data, including the proposed change in Contract Price or Contract Time (if any), to the Engineer and Owner within 15 days after the submittal of the Change Proposal. The supporting data shall be accompanied by a written statement that the supporting data are accurate and complete, and that any requested time or price adjustment is the entire adjustment to which Contractor believes it is entitled as a result of said event. Engineer will advise Owner regarding the Change Proposal, and consider any comments or response from Owner regarding the Change Proposal.
2. *Engineer's Action*: Engineer will review each Change Proposal and, within 30 days after receipt of the Contractor's supporting data, either deny the Change Proposal in whole, approve it in whole, or deny it in part and approve it in part. Such actions shall be in writing, with a copy provided to Owner and Contractor. If Engineer does not take action on the Change Proposal within 30 days, then either Owner or Contractor may at any time thereafter submit a letter to the other party indicating that as a result of Engineer's inaction the Change Proposal is deemed denied, thereby commencing the time for appeal of the denial under Article 12.
3. *Binding Decision*: Engineer's decision will be final and binding upon Owner and Contractor, unless Owner or Contractor appeals the decision by filing a Claim under Article 12.

B. *Resolution of Certain Change Proposals*: If the Change Proposal does not involve the design (as set forth in the Drawings, Specifications, or otherwise), the acceptability of the Work, or other engineering or technical matters, then Engineer will notify the parties that the Engineer is unable to resolve the Change Proposal. For purposes of further resolution of such a Change Proposal, such notice shall be deemed a denial, and Contractor may choose to seek resolution under the terms of Article 12.

11.07 *Execution of Change Orders*

A. Owner and Contractor shall execute appropriate Change Orders covering:

1. changes in the Contract Price or Contract Times which are agreed to by the parties, including any undisputed sum or amount of time for Work actually performed in accordance with a Work Change Directive;
2. changes in Contract Price resulting from an Owner set-off, unless Contractor has duly contested such set-off;
3. changes in the Work which are: (a) ordered by Owner pursuant to Paragraph 11.02, (b) required because of Owner's acceptance of defective Work under Paragraph 14.04 or Owner's correction of defective Work under Paragraph 14.07, or (c) agreed to by the parties, subject to the need for Engineer's recommendation if the change in the Work involves the design (as set forth in the Drawings, Specifications, or otherwise), or other engineering or technical matters; and

Copyright © 2013 National Society of Professional Engineers, American Council of Engineering Companies, and American Society of Civil Engineers. All rights reserved.

4. changes in the Contract Price or Contract Times, or other changes, which embody the substance of any final and binding results under Paragraph 11.06, or Article 12.

B. If Owner or Contractor refuses to execute a Change Order that is required to be executed under the terms of this Paragraph 11.07, it shall be deemed to be of full force and effect, as if fully executed.

11.08 *Notification to Surety*

A. If the provisions of any bond require notice to be given to a surety of any change affecting the general scope of the Work or the provisions of the Contract Documents (including, but not limited to, Contract Price or Contract Times), the giving of any such notice will be Contractor's responsibility. The amount of each applicable bond will be adjusted to reflect the effect of any such change.

ARTICLE 12 – CLAIMS

12.01 *Claims*

A. *Claims Process*: The following disputes between Owner and Contractor shall be submitted to the Claims process set forth in this Article:

1. Appeals by Owner or Contractor of Engineer's decisions regarding Change Proposals;

2. Owner demands for adjustments in the Contract Price or Contract Times, or other relief under the Contract Documents; and

3. Disputes that Engineer has been unable to address because they do not involve the design (as set forth in the Drawings, Specifications, or otherwise), the acceptability of the Work, or other engineering or technical matters.

B. *Submittal of Claim*: The party submitting a Claim shall deliver it directly to the other party to the Contract promptly (but in no event later than 30 days) after the start of the event giving rise thereto; in the case of appeals regarding Change Proposals within 30 days of the decision under appeal. The party submitting the Claim shall also furnish a copy to the Engineer, for its information only. The responsibility to substantiate a Claim shall rest with the party making the Claim. In the case of a Claim by Contractor seeking an increase in the Contract Times or Contract Price, or both, Contractor shall certify that the Claim is made in good faith, that the supporting data are accurate and complete, and that to the best of Contractor's knowledge and belief the amount of time or money requested accurately reflects the full amount to which Contractor is entitled.

C. *Review and Resolution*: The party receiving a Claim shall review it thoroughly, giving full consideration to its merits. The two parties shall seek to resolve the Claim through the exchange of information and direct negotiations. The parties may extend the time for resolving the Claim by mutual agreement. All actions taken on a Claim shall be stated in writing and submitted to the other party, with a copy to Engineer.

D. *Mediation*:

1. At any time after initiation of a Claim, Owner and Contractor may mutually agree to mediation of the underlying dispute. The agreement to mediate shall stay the Claim submittal and response process.

Copyright © 2013 National Society of Professional Engineers, American Council of Engineering Companies, and American Society of Civil Engineers. All rights reserved.

2. If Owner and Contractor agree to mediation, then after 60 days from such agreement, either Owner or Contractor may unilaterally terminate the mediation process, and the Claim submittal and decision process shall resume as of the date of the termination. If the mediation proceeds but is unsuccessful in resolving the dispute, the Claim submittal and decision process shall resume as of the date of the conclusion of the mediation, as determined by the mediator.

3. Owner and Contractor shall each pay one-half of the mediator's fees and costs.

E. *Partial Approval*: If the party receiving a Claim approves the Claim in part and denies it in part, such action shall be final and binding unless within 30 days of such action the other party invokes the procedure set forth in Article 17 for final resolution of disputes.

F. *Denial of Claim*: If efforts to resolve a Claim are not successful, the party receiving the Claim may deny it by giving written notice of denial to the other party. If the receiving party does not take action on the Claim within 90 days, then either Owner or Contractor may at any time thereafter submit a letter to the other party indicating that as a result of the inaction, the Claim is deemed denied, thereby commencing the time for appeal of the denial. A denial of the Claim shall be final and binding unless within 30 days of the denial the other party invokes the procedure set forth in Article 17 for the final resolution of disputes.

G. *Final and Binding Results*: If the parties reach a mutual agreement regarding a Claim, whether through approval of the Claim, direct negotiations, mediation, or otherwise; or if a Claim is approved in part and denied in part, or denied in full, and such actions become final and binding; then the results of the agreement or action on the Claim shall be incorporated in a Change Order to the extent they affect the Contract, including the Work, the Contract Times, or the Contract Price.

ARTICLE 13 – COST OF THE WORK; ALLOWANCES; UNIT PRICE WORK

13.01 *Cost of the Work*

A. *Purposes for Determination of Cost of the Work*: The term Cost of the Work means the sum of all costs necessary for the proper performance of the Work at issue, as further defined below. The provisions of this Paragraph 13.01 are used for two distinct purposes:

1. To determine Cost of the Work when Cost of the Work is a component of the Contract Price, under cost-plus-fee, time-and-materials, or other cost-based terms; or

2. To determine the value of a Change Order, Change Proposal, Claim, set-off, or other adjustment in Contract Price. When the value of any such adjustment is determined on the basis of Cost of the Work, Contractor is entitled only to those additional or incremental costs required because of the change in the Work or because of the event giving rise to the adjustment.

B. *Costs Included*: Except as otherwise may be agreed to in writing by Owner, costs included in the Cost of the Work shall be in amounts no higher than those prevailing in the locality of the Project, shall not include any of the costs itemized in Paragraph 13.01.C, and shall include only the following items:

1. Payroll costs for employees in the direct employ of Contractor in the performance of the Work under schedules of job classifications agreed upon by Owner and Contractor. Such employees shall include, without limitation, superintendents, foremen, and other personnel employed full time on the Work. Payroll costs for employees not employed full time on the Work shall be apportioned on the basis of their time spent on the Work. Payroll costs shall include, but not be limited to, salaries and wages plus the cost of fringe benefits, which shall include social security contributions, unemployment, excise, and

Copyright © 2013 National Society of Professional Engineers, American Council of Engineering Companies, and American Society of Civil Engineers. All rights reserved.

payroll taxes, workers' compensation, health and retirement benefits, bonuses, sick leave, and vacation and holiday pay applicable thereto. The expenses of performing Work outside of regular working hours, on Saturday, Sunday, or legal holidays, shall be included in the above to the extent authorized by Owner.

2. Cost of all materials and equipment furnished and incorporated in the Work, including costs of transportation and storage thereof, and Suppliers' field services required in connection therewith. All cash discounts shall accrue to Contractor unless Owner deposits funds with Contractor with which to make payments, in which case the cash discounts shall accrue to Owner. All trade discounts, rebates, and refunds and returns from sale of surplus materials and equipment shall accrue to Owner, and Contractor shall make provisions so that they may be obtained.

3. Payments made by Contractor to Subcontractors for Work performed by Subcontractors. If required by Owner, Contractor shall obtain competitive bids from subcontractors acceptable to Owner and Contractor and shall deliver such bids to Owner, who will then determine, with the advice of Engineer, which bids, if any, will be acceptable. If any subcontract provides that the Subcontractor is to be paid on the basis of Cost of the Work plus a fee, the Subcontractor's Cost of the Work and fee shall be determined in the same manner as Contractor's Cost of the Work and fee as provided in this Paragraph 13.01.

4. Costs of special consultants (including but not limited to engineers, architects, testing laboratories, surveyors, attorneys, and accountants) employed for services specifically related to the Work.

5. Supplemental costs including the following:

   a. The proportion of necessary transportation, travel, and subsistence expenses of Contractor's employees incurred in discharge of duties connected with the Work.

   b. Cost, including transportation and maintenance, of all materials, supplies, equipment, machinery, appliances, office, and temporary facilities at the Site, and hand tools not owned by the workers, which are consumed in the performance of the Work, and cost, less market value, of such items used but not consumed which remain the property of Contractor.

   c. Rentals of all construction equipment and machinery, and the parts thereof, whether rented from Contractor or others in accordance with rental agreements approved by Owner with the advice of Engineer, and the costs of transportation, loading, unloading, assembly, dismantling, and removal thereof. All such costs shall be in accordance with the terms of said rental agreements. The rental of any such equipment, machinery, or parts shall cease when the use thereof is no longer necessary for the Work.

   d. Sales, consumer, use, and other similar taxes related to the Work, and for which Contractor is liable, as imposed by Laws and Regulations.

   e. Deposits lost for causes other than negligence of Contractor, any Subcontractor, or anyone directly or indirectly employed by any of them or for whose acts any of them may be liable, and royalty payments and fees for permits and licenses.

   f. Losses and damages (and related expenses) caused by damage to the Work, not compensated by insurance or otherwise, sustained by Contractor in connection with the performance of the Work (except losses and damages within the deductible amounts of property insurance established in accordance with Paragraph 6.05), provided such losses and damages have resulted from causes other than the negligence of Contractor, any Subcontractor, or anyone directly or indirectly employed by any of them or for whose acts any of them may be liable. Such losses

Copyright © 2013 National Society of Professional Engineers, American Council of Engineering Companies, and American Society of Civil Engineers. All rights reserved.

shall include settlements made with the written consent and approval of Owner. No such losses, damages, and expenses shall be included in the Cost of the Work for the purpose of determining Contractor's fee.

g. The cost of utilities, fuel, and sanitary facilities at the Site.

h. Minor expenses such as communication service at the Site, express and courier services, and similar petty cash items in connection with the Work.

i. The costs of premiums for all bonds and insurance that Contractor is required by the Contract Documents to purchase and maintain.

C. *Costs Excluded*: The term Cost of the Work shall not include any of the following items:

1. Payroll costs and other compensation of Contractor's officers, executives, principals (of partnerships and sole proprietorships), general managers, safety managers, engineers, architects, estimators, attorneys, auditors, accountants, purchasing and contracting agents, expediters, timekeepers, clerks, and other personnel employed by Contractor, whether at the Site or in Contractor's principal or branch office for general administration of the Work and not specifically included in the agreed upon schedule of job classifications referred to in Paragraph 13.01.B.1 or specifically covered by Paragraph 13.01.B.4. The payroll costs and other compensation excluded here are to be considered administrative costs covered by the Contractor's fee.

2. Expenses of Contractor's principal and branch offices other than Contractor's office at the Site.

3. Any part of Contractor's capital expenses, including interest on Contractor's capital employed for the Work and charges against Contractor for delinquent payments.

4. Costs due to the negligence of Contractor, any Subcontractor, or anyone directly or indirectly employed by any of them or for whose acts any of them may be liable, including but not limited to, the correction of defective Work, disposal of materials or equipment wrongly supplied, and making good any damage to property.

5. Other overhead or general expense costs of any kind and the costs of any item not specifically and expressly included in Paragraph 13.01.B.

D. *Contractor's Fee*: When the Work as a whole is performed on the basis of cost-plus, Contractor's fee shall be determined as set forth in the Agreement. When the value of any Work covered by a Change Order, Change Proposal, Claim, set-off, or other adjustment in Contract Price is determined on the basis of Cost of the Work, Contractor's fee shall be determined as set forth in Paragraph 11.04.C.

E. *Documentation*: Whenever the Cost of the Work for any purpose is to be determined pursuant to this Article 13, Contractor will establish and maintain records thereof in accordance with generally accepted accounting practices and submit in a form acceptable to Engineer an itemized cost breakdown together with supporting data.

13.02 *Allowances*

A. It is understood that Contractor has included in the Contract Price all allowances so named in the Contract Documents and shall cause the Work so covered to be performed for such sums and by such persons or entities as may be acceptable to Owner and Engineer.

B. *Cash Allowances*: Contractor agrees that:

1. the cash allowances include the cost to Contractor (less any applicable trade discounts) of materials and equipment required by the allowances to be delivered at the Site, and all applicable taxes; and

Copyright © 2013 National Society of Professional Engineers, American Council of Engineering Companies, and American Society of Civil Engineers. All rights reserved.

2. Contractor's costs for unloading and handling on the Site, labor, installation, overhead, profit, and other expenses contemplated for the cash allowances have been included in the Contract Price and not in the allowances, and no demand for additional payment on account of any of the foregoing will be valid.

C. *Contingency Allowance*: Contractor agrees that a contingency allowance, if any, is for the sole use of Owner to cover unanticipated costs.

D. Prior to final payment, an appropriate Change Order will be issued as recommended by Engineer to reflect actual amounts due Contractor on account of Work covered by allowances, and the Contract Price shall be correspondingly adjusted.

13.03 *Unit Price Work*

A. Where the Contract Documents provide that all or part of the Work is to be Unit Price Work, initially the Contract Price will be deemed to include for all Unit Price Work an amount equal to the sum of the unit price for each separately identified item of Unit Price Work times the estimated quantity of each item as indicated in the Agreement.

B. The estimated quantities of items of Unit Price Work are not guaranteed and are solely for the purpose of comparison of Bids and determining an initial Contract Price. Payments to Contractor for Unit Price Work will be based on actual quantities.

C. Each unit price will be deemed to include an amount considered by Contractor to be adequate to cover Contractor's overhead and profit for each separately identified item.

D. Engineer will determine the actual quantities and classifications of Unit Price Work performed by Contractor. Engineer will review with Contractor the Engineer's preliminary determinations on such matters before rendering a written decision thereon (by recommendation of an Application for Payment or otherwise). Engineer's written decision thereon will be final and binding (except as modified by Engineer to reflect changed factual conditions or more accurate data) upon Owner and Contractor, subject to the provisions of the following paragraph.

E. Within 30 days of Engineer's written decision under the preceding paragraph, Contractor may submit a Change Proposal, or Owner may file a Claim, seeking an adjustment in the Contract Price if:

1. the quantity of any item of Unit Price Work performed by Contractor differs materially and significantly from the estimated quantity of such item indicated in the Agreement;

2. there is no corresponding adjustment with respect to any other item of Work; and

3. Contractor believes that it is entitled to an increase in Contract Price as a result of having incurred additional expense or Owner believes that Owner is entitled to a decrease in Contract Price, and the parties are unable to agree as to the amount of any such increase or decrease.

ARTICLE 14 – TESTS AND INSPECTIONS; CORRECTION, REMOVAL OR ACCEPTANCE OF DEFECTIVE WORK

14.01 *Access to Work*

A. Owner, Engineer, their consultants and other representatives and personnel of Owner, independent testing laboratories, and authorities having jurisdiction will have access to the Site and the Work at reasonable times for their observation, inspection, and testing. Contractor shall provide them proper and safe conditions for such access and advise them of Contractor's safety procedures and programs so that they may comply therewith as applicable.

Copyright © 2013 National Society of Professional Engineers, American Council of Engineering Companies, and American Society of Civil Engineers. All rights reserved.

14.02 *Tests, Inspections, and Approvals*

A. Contractor shall give Engineer timely notice of readiness of the Work (or specific parts thereof) for all required inspections and tests, and shall cooperate with inspection and testing personnel to facilitate required inspections and tests.

B. Owner shall retain and pay for the services of an independent inspector, testing laboratory, or other qualified individual or entity to perform all inspections and tests expressly required by the Contract Documents to be furnished and paid for by Owner, except that costs incurred in connection with tests or inspections of covered Work shall be governed by the provisions of Paragraph 14.05.

C. If Laws or Regulations of any public body having jurisdiction require any Work (or part thereof) specifically to be inspected, tested, or approved by an employee or other representative of such public body, Contractor shall assume full responsibility for arranging and obtaining such inspections, tests, or approvals, pay all costs in connection therewith, and furnish Engineer the required certificates of inspection or approval.

D. Contractor shall be responsible for arranging, obtaining, and paying for all inspections and tests required:

1. by the Contract Documents, unless the Contract Documents expressly allocate responsibility for a specific inspection or test to Owner;

2. to attain Owner's and Engineer's acceptance of materials or equipment to be incorporated in the Work;

3. by manufacturers of equipment furnished under the Contract Documents;

4. for testing, adjusting, and balancing of mechanical, electrical, and other equipment to be incorporated into the Work; and

5. for acceptance of materials, mix designs, or equipment submitted for approval prior to Contractor's purchase thereof for incorporation in the Work.

Such inspections and tests shall be performed by independent inspectors, testing laboratories, or other qualified individuals or entities acceptable to Owner and Engineer.

E. If the Contract Documents require the Work (or part thereof) to be approved by Owner, Engineer, or another designated individual or entity, then Contractor shall assume full responsibility for arranging and obtaining such approvals.

F. If any Work (or the work of others) that is to be inspected, tested, or approved is covered by Contractor without written concurrence of Engineer, Contractor shall, if requested by Engineer, uncover such Work for observation. Such uncovering shall be at Contractor's expense unless Contractor had given Engineer timely notice of Contractor's intention to cover the same and Engineer had not acted with reasonable promptness in response to such notice.

14.03 *Defective Work*

A. *Contractor's Obligation*: It is Contractor's obligation to assure that the Work is not defective.

B. *Engineer's Authority*: Engineer has the authority to determine whether Work is defective, and to reject defective Work.

C. *Notice of Defects*: Prompt notice of all defective Work of which Owner or Engineer has actual knowledge will be given to Contractor.

D. *Correction, or Removal and Replacement*: Promptly after receipt of written notice of defective Work, Contractor shall correct all such defective Work, whether or not fabricated, installed,

Copyright © 2013 National Society of Professional Engineers, American Council of Engineering Companies, and American Society of Civil Engineers. All rights reserved.

or completed, or, if Engineer has rejected the defective Work, remove it from the Project and replace it with Work that is not defective.

E. *Preservation of Warranties*: When correcting defective Work, Contractor shall take no action that would void or otherwise impair Owner's special warranty and guarantee, if any, on said Work.

F. *Costs and Damages*: In addition to its correction, removal, and replacement obligations with respect to defective Work, Contractor shall pay all claims, costs, losses, and damages arising out of or relating to defective Work, including but not limited to the cost of the inspection, testing, correction, removal, replacement, or reconstruction of such defective Work, fines levied against Owner by governmental authorities because the Work is defective, and the costs of repair or replacement of work of others resulting from defective Work. Prior to final payment, if Owner and Contractor are unable to agree as to the measure of such claims, costs, losses, and damages resulting from defective Work, then Owner may impose a reasonable set-off against payments due under Article 15.

14.04 *Acceptance of Defective Work*

A. If, instead of requiring correction or removal and replacement of defective Work, Owner prefers to accept it, Owner may do so (subject, if such acceptance occurs prior to final payment, to Engineer's confirmation that such acceptance is in general accord with the design intent and applicable engineering principles, and will not endanger public safety). Contractor shall pay all claims, costs, losses, and damages attributable to Owner's evaluation of and determination to accept such defective Work (such costs to be approved by Engineer as to reasonableness), and for the diminished value of the Work to the extent not otherwise paid by Contractor. If any such acceptance occurs prior to final payment, the necessary revisions in the Contract Documents with respect to the Work shall be incorporated in a Change Order. If the parties are unable to agree as to the decrease in the Contract Price, reflecting the diminished value of Work so accepted, then Owner may impose a reasonable set-off against payments due under Article 15. If the acceptance of defective Work occurs after final payment, Contractor shall pay an appropriate amount to Owner.

14.05 *Uncovering Work*

A. Engineer has the authority to require special inspection or testing of the Work, whether or not the Work is fabricated, installed, or completed.

B. If any Work is covered contrary to the written request of Engineer, then Contractor shall, if requested by Engineer, uncover such Work for Engineer's observation, and then replace the covering, all at Contractor's expense.

C. If Engineer considers it necessary or advisable that covered Work be observed by Engineer or inspected or tested by others, then Contractor, at Engineer's request, shall uncover, expose, or otherwise make available for observation, inspection, or testing as Engineer may require, that portion of the Work in question, and provide all necessary labor, material, and equipment.

1. If it is found that the uncovered Work is defective, Contractor shall be responsible for all claims, costs, losses, and damages arising out of or relating to such uncovering, exposure, observation, inspection, and testing, and of satisfactory replacement or reconstruction (including but not limited to all costs of repair or replacement of work of others); and pending Contractor's full discharge of this responsibility the Owner shall be entitled to impose a reasonable set-off against payments due under Article 15.

2. If the uncovered Work is not found to be defective, Contractor shall be allowed an increase in the Contract Price or an extension of the Contract Times, or both, directly attributable to such uncovering, exposure, observation, inspection, testing, replacement, and reconstruction. If the parties are unable to agree as to the amount or extent thereof,

Copyright © 2013 National Society of Professional Engineers, American Council of Engineering Companies, and American Society of Civil Engineers. All rights reserved.

then Contractor may submit a Change Proposal within 30 days of the determination that the Work is not defective.

14.06 *Owner May Stop the Work*

A. If the Work is defective, or Contractor fails to supply sufficient skilled workers or suitable materials or equipment, or fails to perform the Work in such a way that the completed Work will conform to the Contract Documents, then Owner may order Contractor to stop the Work, or any portion thereof, until the cause for such order has been eliminated; however, this right of Owner to stop the Work shall not give rise to any duty on the part of Owner to exercise this right for the benefit of Contractor, any Subcontractor, any Supplier, any other individual or entity, or any surety for, or employee or agent of any of them.

14.07 *Owner May Correct Defective Work*

A. If Contractor fails within a reasonable time after written notice from Engineer to correct defective Work, or to remove and replace rejected Work as required by Engineer, or if Contractor fails to perform the Work in accordance with the Contract Documents, or if Contractor fails to comply with any other provision of the Contract Documents, then Owner may, after seven days written notice to Contractor, correct or remedy any such deficiency.

B. In exercising the rights and remedies under this Paragraph 14.07, Owner shall proceed expeditiously. In connection with such corrective or remedial action, Owner may exclude Contractor from all or part of the Site, take possession of all or part of the Work and suspend Contractor's services related thereto, and incorporate in the Work all materials and equipment stored at the Site or for which Owner has paid Contractor but which are stored elsewhere. Contractor shall allow Owner, Owner's representatives, agents and employees, Owner's other contractors, and Engineer and Engineer's consultants access to the Site to enable Owner to exercise the rights and remedies under this paragraph.

C. All claims, costs, losses, and damages incurred or sustained by Owner in exercising the rights and remedies under this Paragraph 14.07 will be charged against Contractor as set-offs against payments due under Article 15. Such claims, costs, losses and damages will include but not be limited to all costs of repair, or replacement of work of others destroyed or damaged by correction, removal, or replacement of Contractor's defective Work.

D. Contractor shall not be allowed an extension of the Contract Times because of any delay in the performance of the Work attributable to the exercise by Owner of Owner's rights and remedies under this Paragraph 14.07.

ARTICLE 15 – PAYMENTS TO CONTRACTOR; SET-OFFS; COMPLETION; CORRECTION PERIOD

15.01 *Progress Payments*

A. *Basis for Progress Payments*: The Schedule of Values established as provided in Article 2 will serve as the basis for progress payments and will be incorporated into a form of Application for Payment acceptable to Engineer. Progress payments on account of Unit Price Work will be based on the number of units completed during the pay period, as determined under the provisions of Paragraph 13.03. Progress payments for cost-based Work will be based on Cost of the Work completed by Contractor during the pay period.

B. *Applications for Payments*:

1. At least 20 days before the date established in the Agreement for each progress payment (but not more often than once a month), Contractor shall submit to Engineer for review an Application for Payment filled out and signed by Contractor covering the Work completed as of the date of the Application and accompanied by such supporting

Copyright © 2013 National Society of Professional Engineers, American Council of Engineering Companies, and American Society of Civil Engineers. All rights reserved.

documentation as is required by the Contract Documents. If payment is requested on the basis of materials and equipment not incorporated in the Work but delivered and suitably stored at the Site or at another location agreed to in writing, the Application for Payment shall also be accompanied by a bill of sale, invoice, or other documentation warranting that Owner has received the materials and equipment free and clear of all Liens, and evidence that the materials and equipment are covered by appropriate property insurance, a warehouse bond, or other arrangements to protect Owner's interest therein, all of which must be satisfactory to Owner.

2. Beginning with the second Application for Payment, each Application shall include an affidavit of Contractor stating that all previous progress payments received on account of the Work have been applied on account to discharge Contractor's legitimate obligations associated with prior Applications for Payment.

3. The amount of retainage with respect to progress payments will be as stipulated in the Agreement.

C. *Review of Applications*:

1. Engineer will, within 10 days after receipt of each Application for Payment, including each resubmittal, either indicate in writing a recommendation of payment and present the Application to Owner, or return the Application to Contractor indicating in writing Engineer's reasons for refusing to recommend payment. In the latter case, Contractor may make the necessary corrections and resubmit the Application.

2. Engineer's recommendation of any payment requested in an Application for Payment will constitute a representation by Engineer to Owner, based on Engineer's observations of the executed Work as an experienced and qualified design professional, and on Engineer's review of the Application for Payment and the accompanying data and schedules, that to the best of Engineer's knowledge, information and belief:

   a. the Work has progressed to the point indicated;

   b. the quality of the Work is generally in accordance with the Contract Documents (subject to an evaluation of the Work as a functioning whole prior to or upon Substantial Completion, the results of any subsequent tests called for in the Contract Documents, a final determination of quantities and classifications for Unit Price Work under Paragraph 13.03, and any other qualifications stated in the recommendation); and

   c. the conditions precedent to Contractor's being entitled to such payment appear to have been fulfilled in so far as it is Engineer's responsibility to observe the Work.

3. By recommending any such payment Engineer will not thereby be deemed to have represented that:

   a. inspections made to check the quality or the quantity of the Work as it has been performed have been exhaustive, extended to every aspect of the Work in progress, or involved detailed inspections of the Work beyond the responsibilities specifically assigned to Engineer in the Contract; or

   b. there may not be other matters or issues between the parties that might entitle Contractor to be paid additionally by Owner or entitle Owner to withhold payment to Contractor.

4. Neither Engineer's review of Contractor's Work for the purposes of recommending payments nor Engineer's recommendation of any payment, including final payment, will impose responsibility on Engineer:

Copyright © 2013 National Society of Professional Engineers, American Council of Engineering Companies, and American Society of Civil Engineers. All rights reserved.

a. to supervise, direct, or control the Work, or

b. for the means, methods, techniques, sequences, or procedures of construction, or the safety precautions and programs incident thereto, or

c. for Contractor's failure to comply with Laws and Regulations applicable to Contractor's performance of the Work, or

d. to make any examination to ascertain how or for what purposes Contractor has used the money paid on account of the Contract Price, or

e. to determine that title to any of the Work, materials, or equipment has passed to Owner free and clear of any Liens.

5. Engineer may refuse to recommend the whole or any part of any payment if, in Engineer's opinion, it would be incorrect to make the representations to Owner stated in Paragraph 15.01.C.2.

6. Engineer will recommend reductions in payment (set-offs) necessary in Engineer's opinion to protect Owner from loss because:

a. the Work is defective, requiring correction or replacement;

b. the Contract Price has been reduced by Change Orders;

c. Owner has been required to correct defective Work in accordance with Paragraph 14.07, or has accepted defective Work pursuant to Paragraph 14.04;

d. Owner has been required to remove or remediate a Hazardous Environmental Condition for which Contractor is responsible; or

e. Engineer has actual knowledge of the occurrence of any of the events that would constitute a default by Contractor and therefore justify termination for cause under the Contract Documents.

D. *Payment Becomes Due*:

1. Ten days after presentation of the Application for Payment to Owner with Engineer's recommendation, the amount recommended (subject to any Owner set-offs) will become due, and when due will be paid by Owner to Contractor.

E. *Reductions in Payment by Owner*:

1. In addition to any reductions in payment (set-offs) recommended by Engineer, Owner is entitled to impose a set-off against payment based on any of the following:

a. claims have been made against Owner on account of Contractor's conduct in the performance or furnishing of the Work, or Owner has incurred costs, losses, or damages on account of Contractor's conduct in the performance or furnishing of the Work, including but not limited to claims, costs, losses, or damages from workplace injuries, adjacent property damage, non-compliance with Laws and Regulations, and patent infringement;

b. Contractor has failed to take reasonable and customary measures to avoid damage, delay, disruption, and interference with other work at or adjacent to the Site;

c. Contractor has failed to provide and maintain required bonds or insurance;

d. Owner has been required to remove or remediate a Hazardous Environmental Condition for which Contractor is responsible;

Copyright © 2013 National Society of Professional Engineers, American Council of Engineering Companies, and American Society of Civil Engineers. All rights reserved.

e. Owner has incurred extra charges or engineering costs related to submittal reviews, evaluations of proposed substitutes, tests and inspections, or return visits to manufacturing or assembly facilities;

f. the Work is defective, requiring correction or replacement;

g. Owner has been required to correct defective Work in accordance with Paragraph 14.07, or has accepted defective Work pursuant to Paragraph 14.04;

h. the Contract Price has been reduced by Change Orders;

i. an event that would constitute a default by Contractor and therefore justify a termination for cause has occurred;

j. liquidated damages have accrued as a result of Contractor's failure to achieve Milestones, Substantial Completion, or final completion of the Work;

k. Liens have been filed in connection with the Work, except where Contractor has delivered a specific bond satisfactory to Owner to secure the satisfaction and discharge of such Liens;

l. there are other items entitling Owner to a set off against the amount recommended.

2. If Owner imposes any set-off against payment, whether based on its own knowledge or on the written recommendations of Engineer, Owner will give Contractor immediate written notice (with a copy to Engineer) stating the reasons for such action and the specific amount of the reduction, and promptly pay Contractor any amount remaining after deduction of the amount so withheld. Owner shall promptly pay Contractor the amount so withheld, or any adjustment thereto agreed to by Owner and Contractor, if Contractor remedies the reasons for such action. The reduction imposed shall be binding on Contractor unless it duly submits a Change Proposal contesting the reduction.

3. Upon a subsequent determination that Owner's refusal of payment was not justified, the amount wrongfully withheld shall be treated as an amount due as determined by Paragraph 15.01.C.1 and subject to interest as provided in the Agreement.

15.02 *Contractor's Warranty of Title*

A. Contractor warrants and guarantees that title to all Work, materials, and equipment furnished under the Contract will pass to Owner free and clear of (1) all Liens and other title defects, and (2) all patent, licensing, copyright, or royalty obligations, no later than seven days after the time of payment by Owner.

15.03 *Substantial Completion*

A. When Contractor considers the entire Work ready for its intended use Contractor shall notify Owner and Engineer in writing that the entire Work is substantially complete and request that Engineer issue a certificate of Substantial Completion. Contractor shall at the same time submit to Owner and Engineer an initial draft of punch list items to be completed or corrected before final payment.

B. Promptly after Contractor's notification, Owner, Contractor, and Engineer shall make an inspection of the Work to determine the status of completion. If Engineer does not consider the Work substantially complete, Engineer will notify Contractor in writing giving the reasons therefor.

C. If Engineer considers the Work substantially complete, Engineer will deliver to Owner a preliminary certificate of Substantial Completion which shall fix the date of Substantial Completion. Engineer shall attach to the certificate a punch list of items to be completed or corrected before final payment. Owner shall have seven days after receipt of the preliminary

Copyright © 2013 National Society of Professional Engineers, American Council of Engineering Companies, and American Society of Civil Engineers. All rights reserved.

certificate during which to make written objection to Engineer as to any provisions of the certificate or attached punch list. If, after considering the objections to the provisions of the preliminary certificate, Engineer concludes that the Work is not substantially complete, Engineer will, within 14 days after submission of the preliminary certificate to Owner, notify Contractor in writing that the Work is not substantially complete, stating the reasons therefor. If Owner does not object to the provisions of the certificate, or if despite consideration of Owner's objections Engineer concludes that the Work is substantially complete, then Engineer will, within said 14 days, execute and deliver to Owner and Contractor a final certificate of Substantial Completion (with a revised punch list of items to be completed or corrected) reflecting such changes from the preliminary certificate as Engineer believes justified after consideration of any objections from Owner.

D. At the time of receipt of the preliminary certificate of Substantial Completion, Owner and Contractor will confer regarding Owner's use or occupancy of the Work following Substantial Completion, review the builder's risk insurance policy with respect to the end of the builder's risk coverage, and confirm the transition to coverage of the Work under a permanent property insurance policy held by Owner. Unless Owner and Contractor agree otherwise in writing, Owner shall bear responsibility for security, operation, protection of the Work, property insurance, maintenance, heat, and utilities upon Owner's use or occupancy of the Work.

E. After Substantial Completion the Contractor shall promptly begin work on the punch list of items to be completed or corrected prior to final payment. In appropriate cases Contractor may submit monthly Applications for Payment for completed punch list items, following the progress payment procedures set forth above.

F. Owner shall have the right to exclude Contractor from the Site after the date of Substantial Completion subject to allowing Contractor reasonable access to remove its property and complete or correct items on the punch list.

15.04 *Partial Use or Occupancy*

A. Prior to Substantial Completion of all the Work, Owner may use or occupy any substantially completed part of the Work which has specifically been identified in the Contract Documents, or which Owner, Engineer, and Contractor agree constitutes a separately functioning and usable part of the Work that can be used by Owner for its intended purpose without significant interference with Contractor's performance of the remainder of the Work, subject to the following conditions:

1. At any time Owner may request in writing that Contractor permit Owner to use or occupy any such part of the Work that Owner believes to be substantially complete. If and when Contractor agrees that such part of the Work is substantially complete, Contractor, Owner, and Engineer will follow the procedures of Paragraph 15.03.A through E for that part of the Work.

2. At any time Contractor may notify Owner and Engineer in writing that Contractor considers any such part of the Work substantially complete and request Engineer to issue a certificate of Substantial Completion for that part of the Work.

3. Within a reasonable time after either such request, Owner, Contractor, and Engineer shall make an inspection of that part of the Work to determine its status of completion. If Engineer does not consider that part of the Work to be substantially complete, Engineer will notify Owner and Contractor in writing giving the reasons therefor. If Engineer considers that part of the Work to be substantially complete, the provisions of Paragraph 15.03 will apply with respect to certification of Substantial Completion of that part of the Work and the division of responsibility in respect thereof and access thereto.

Copyright © 2013 National Society of Professional Engineers, American Council of Engineering Companies, and American Society of Civil Engineers. All rights reserved.

4. No use or occupancy or separate operation of part of the Work may occur prior to compliance with the requirements of Paragraph 6.05 regarding builder's risk or other property insurance.

15.05 *Final Inspection*

A. Upon written notice from Contractor that the entire Work or an agreed portion thereof is complete, Engineer will promptly make a final inspection with Owner and Contractor and will notify Contractor in writing of all particulars in which this inspection reveals that the Work, or agreed portion thereof, is incomplete or defective. Contractor shall immediately take such measures as are necessary to complete such Work or remedy such deficiencies.

15.06 *Final Payment*

A. *Application for Payment*:

1. After Contractor has, in the opinion of Engineer, satisfactorily completed all corrections identified during the final inspection and has delivered, in accordance with the Contract Documents, all maintenance and operating instructions, schedules, guarantees, bonds, certificates or other evidence of insurance, certificates of inspection, annotated record documents (as provided in Paragraph 7.11), and other documents, Contractor may make application for final payment.

2. The final Application for Payment shall be accompanied (except as previously delivered) by:

a. all documentation called for in the Contract Documents;

b. consent of the surety, if any, to final payment;

c. satisfactory evidence that all title issues have been resolved such that title to all Work, materials, and equipment has passed to Owner free and clear of any Liens or other title defects, or will so pass upon final payment.

d. a list of all disputes that Contractor believes are unsettled; and

e. complete and legally effective releases or waivers (satisfactory to Owner) of all Lien rights arising out of the Work, and of Liens filed in connection with the Work.

3. In lieu of the releases or waivers of Liens specified in Paragraph 15.06.A.2 and as approved by Owner, Contractor may furnish receipts or releases in full and an affidavit of Contractor that: (a) the releases and receipts include all labor, services, material, and equipment for which a Lien could be filed; and (b) all payrolls, material and equipment bills, and other indebtedness connected with the Work for which Owner might in any way be responsible, or which might in any way result in liens or other burdens on Owner's property, have been paid or otherwise satisfied. If any Subcontractor or Supplier fails to furnish such a release or receipt in full, Contractor may furnish a bond or other collateral satisfactory to Owner to indemnify Owner against any Lien, or Owner at its option may issue joint checks payable to Contractor and specified Subcontractors and Suppliers.

B. *Engineer's Review of Application and Acceptance*:

1. If, on the basis of Engineer's observation of the Work during construction and final inspection, and Engineer's review of the final Application for Payment and accompanying documentation as required by the Contract Documents, Engineer is satisfied that the Work has been completed and Contractor's other obligations under the Contract have been fulfilled, Engineer will, within ten days after receipt of the final Application for Payment, indicate in writing Engineer's recommendation of final payment and present the Application for Payment to Owner for payment. Such recommendation shall account for any set-offs against payment that are necessary in

Copyright © 2013 National Society of Professional Engineers, American Council of Engineering Companies, and American Society of Civil Engineers. All rights reserved.

Engineer's opinion to protect Owner from loss for the reasons stated above with respect to progress payments. At the same time Engineer will also give written notice to Owner and Contractor that the Work is acceptable, subject to the provisions of Paragraph 15.07. Otherwise, Engineer will return the Application for Payment to Contractor, indicating in writing the reasons for refusing to recommend final payment, in which case Contractor shall make the necessary corrections and resubmit the Application for Payment.

C. *Completion of Work*: The Work is complete (subject to surviving obligations) when it is ready for final payment as established by the Engineer's written recommendation of final payment.

D. *Payment Becomes Due*: Thirty days after the presentation to Owner of the final Application for Payment and accompanying documentation, the amount recommended by Engineer (less any further sum Owner is entitled to set off against Engineer's recommendation, including but not limited to set-offs for liquidated damages and set-offs allowed under the provisions above with respect to progress payments) will become due and shall be paid by Owner to Contractor.

15.07 *Waiver of Claims*

A. The making of final payment will not constitute a waiver by Owner of claims or rights against Contractor. Owner expressly reserves claims and rights arising from unsettled Liens, from defective Work appearing after final inspection pursuant to Paragraph 15.05, from Contractor's failure to comply with the Contract Documents or the terms of any special guarantees specified therein, from outstanding Claims by Owner, or from Contractor's continuing obligations under the Contract Documents.

B. The acceptance of final payment by Contractor will constitute a waiver by Contractor of all claims and rights against Owner other than those pending matters that have been duly submitted or appealed under the provisions of Article 17.

15.08 *Correction Period*

A. If within one year after the date of Substantial Completion (or such longer period of time as may be prescribed by the terms of any applicable special guarantee required by the Contract Documents, or by any specific provision of the Contract Documents), any Work is found to be defective, or if the repair of any damages to the Site, adjacent areas that Contractor has arranged to use through construction easements or otherwise, and other adjacent areas used by Contractor as permitted by Laws and Regulations, is found to be defective, then Contractor shall promptly, without cost to Owner and in accordance with Owner's written instructions:

1. correct the defective repairs to the Site or such other adjacent areas;
2. correct such defective Work;
3. if the defective Work has been rejected by Owner, remove it from the Project and replace it with Work that is not defective, and
4. satisfactorily correct or repair or remove and replace any damage to other Work, to the work of others, or to other land or areas resulting therefrom.

B. If Contractor does not promptly comply with the terms of Owner's written instructions, or in an emergency where delay would cause serious risk of loss or damage, Owner may have the defective Work corrected or repaired or may have the rejected Work removed and replaced. Contractor shall pay all claims, costs, losses, and damages (including but not limited to all fees and charges of engineers, architects, attorneys, and other professionals and all court or arbitration or other dispute resolution costs) arising out of or relating to such correction or repair or such removal and replacement (including but not limited to all costs of repair or replacement of work of others).

Copyright © 2013 National Society of Professional Engineers, American Council of Engineering Companies, and American Society of Civil Engineers. All rights reserved.

C. In special circumstances where a particular item of equipment is placed in continuous service before Substantial Completion of all the Work, the correction period for that item may start to run from an earlier date if so provided in the Specifications.

D. Where defective Work (and damage to other Work resulting therefrom) has been corrected or removed and replaced under this paragraph, the correction period hereunder with respect to such Work will be extended for an additional period of one year after such correction or removal and replacement has been satisfactorily completed.

E. Contractor's obligations under this paragraph are in addition to all other obligations and warranties. The provisions of this paragraph shall not be construed as a substitute for, or a waiver of, the provisions of any applicable statute of limitation or repose.

ARTICLE 16 – SUSPENSION OF WORK AND TERMINATION

16.01 *Owner May Suspend Work*

A. At any time and without cause, Owner may suspend the Work or any portion thereof for a period of not more than 90 consecutive days by written notice to Contractor and Engineer. Such notice will fix the date on which Work will be resumed. Contractor shall resume the Work on the date so fixed. Contractor shall be entitled to an adjustment in the Contract Price or an extension of the Contract Times, or both, directly attributable to any such suspension. Any Change Proposal seeking such adjustments shall be submitted no later than 30 days after the date fixed for resumption of Work.

16.02 *Owner May Terminate for Cause*

A. The occurrence of any one or more of the following events will constitute a default by Contractor and justify termination for cause:

1. Contractor's persistent failure to perform the Work in accordance with the Contract Documents (including, but not limited to, failure to supply sufficient skilled workers or suitable materials or equipment or failure to adhere to the Progress Schedule);

2. Failure of Contractor to perform or otherwise to comply with a material term of the Contract Documents;

3. Contractor's disregard of Laws or Regulations of any public body having jurisdiction; or

4. Contractor's repeated disregard of the authority of Owner or Engineer.

B. If one or more of the events identified in Paragraph 16.02.A occurs, then after giving Contractor (and any surety) ten days written notice that Owner is considering a declaration that Contractor is in default and termination of the contract, Owner may proceed to:

1. declare Contractor to be in default, and give Contractor (and any surety) notice that the Contract is terminated; and

2. enforce the rights available to Owner under any applicable performance bond.

C. Subject to the terms and operation of any applicable performance bond, if Owner has terminated the Contract for cause, Owner may exclude Contractor from the Site, take possession of the Work, incorporate in the Work all materials and equipment stored at the Site or for which Owner has paid Contractor but which are stored elsewhere, and complete the Work as Owner may deem expedient.

D. Owner may not proceed with termination of the Contract under Paragraph 16.02.B if Contractor within seven days of receipt of notice of intent to terminate begins to correct its failure to perform and proceeds diligently to cure such failure.

Copyright © 2013 National Society of Professional Engineers, American Council of Engineering Companies, and American Society of Civil Engineers. All rights reserved.

E. If Owner proceeds as provided in Paragraph 16.02.B, Contractor shall not be entitled to receive any further payment until the Work is completed. If the unpaid balance of the Contract Price exceeds the cost to complete the Work, including all related claims, costs, losses, and damages (including but not limited to all fees and charges of engineers, architects, attorneys, and other professionals) sustained by Owner, such excess will be paid to Contractor. If the cost to complete the Work including such related claims, costs, losses, and damages exceeds such unpaid balance, Contractor shall pay the difference to Owner. Such claims, costs, losses, and damages incurred by Owner will be reviewed by Engineer as to their reasonableness and, when so approved by Engineer, incorporated in a Change Order. When exercising any rights or remedies under this paragraph, Owner shall not be required to obtain the lowest price for the Work performed.

F. Where Contractor's services have been so terminated by Owner, the termination will not affect any rights or remedies of Owner against Contractor then existing or which may thereafter accrue, or any rights or remedies of Owner against Contractor or any surety under any payment bond or performance bond. Any retention or payment of money due Contractor by Owner will not release Contractor from liability.

G. If and to the extent that Contractor has provided a performance bond under the provisions of Paragraph 6.01.A, the provisions of that bond shall govern over any inconsistent provisions of Paragraphs 16.02.B and 16.02.D.

16.03 *Owner May Terminate For Convenience*

A. Upon seven days written notice to Contractor and Engineer, Owner may, without cause and without prejudice to any other right or remedy of Owner, terminate the Contract. In such case, Contractor shall be paid for (without duplication of any items):

1. completed and acceptable Work executed in accordance with the Contract Documents prior to the effective date of termination, including fair and reasonable sums for overhead and profit on such Work;

2. expenses sustained prior to the effective date of termination in performing services and furnishing labor, materials, or equipment as required by the Contract Documents in connection with uncompleted Work, plus fair and reasonable sums for overhead and profit on such expenses; and

3. other reasonable expenses directly attributable to termination, including costs incurred to prepare a termination for convenience cost proposal.

B. Contractor shall not be paid on account of loss of anticipated overhead, profits, or revenue, or other economic loss arising out of or resulting from such termination.

16.04 *Contractor May Stop Work or Terminate*

A. If, through no act or fault of Contractor, (1) the Work is suspended for more than 90 consecutive days by Owner or under an order of court or other public authority, or (2) Engineer fails to act on any Application for Payment within 30 days after it is submitted, or (3) Owner fails for 30 days to pay Contractor any sum finally determined to be due, then Contractor may, upon seven days written notice to Owner and Engineer, and provided Owner or Engineer do not remedy such suspension or failure within that time, terminate the contract and recover from Owner payment on the same terms as provided in Paragraph 16.03.

B. In lieu of terminating the Contract and without prejudice to any other right or remedy, if Engineer has failed to act on an Application for Payment within 30 days after it is submitted, or Owner has failed for 30 days to pay Contractor any sum finally determined to be due, Contractor may, seven days after written notice to Owner and Engineer, stop the Work until payment is made of all such amounts due Contractor, including interest thereon. The

Copyright © 2013 National Society of Professional Engineers, American Council of Engineering Companies, and American Society of Civil Engineers. All rights reserved.

provisions of this paragraph are not intended to preclude Contractor from submitting a Change Proposal for an adjustment in Contract Price or Contract Times or otherwise for expenses or damage directly attributable to Contractor's stopping the Work as permitted by this paragraph.

ARTICLE 17 – FINAL RESOLUTION OF DISPUTES

17.01 *Methods and Procedures*

A. *Disputes Subject to Final Resolution*: The following disputed matters are subject to final resolution under the provisions of this Article:

1. A timely appeal of an approval in part and denial in part of a Claim, or of a denial in full; and
2. Disputes between Owner and Contractor concerning the Work or obligations under the Contract Documents, and arising after final payment has been made.

B. *Final Resolution of Disputes*: For any dispute subject to resolution under this Article, Owner or Contractor may:

1. elect in writing to invoke the dispute resolution process provided for in the Supplementary Conditions; or
2. agree with the other party to submit the dispute to another dispute resolution process; or
3. if no dispute resolution process is provided for in the Supplementary Conditions or mutually agreed to, give written notice to the other party of the intent to submit the dispute to a court of competent jurisdiction.

ARTICLE 18 – MISCELLANEOUS

18.01 *Giving Notice*

A. Whenever any provision of the Contract Documents requires the giving of written notice, it will be deemed to have been validly given if:

1. delivered in person, by a commercial courier service or otherwise, to the individual or to a member of the firm or to an officer of the corporation for which it is intended; or
2. delivered at or sent by registered or certified mail, postage prepaid, to the last business address known to the sender of the notice.

18.02 *Computation of Times*

A. When any period of time is referred to in the Contract by days, it will be computed to exclude the first and include the last day of such period. If the last day of any such period falls on a Saturday or Sunday or on a day made a legal holiday by the law of the applicable jurisdiction, such day will be omitted from the computation.

18.03 *Cumulative Remedies*

A. The duties and obligations imposed by these General Conditions and the rights and remedies available hereunder to the parties hereto are in addition to, and are not to be construed in any way as a limitation of, any rights and remedies available to any or all of them which are otherwise imposed or available by Laws or Regulations, by special warranty or guarantee, or by other provisions of the Contract. The provisions of this paragraph will be as effective as if repeated specifically in the Contract Documents in connection with each particular duty, obligation, right, and remedy to which they apply.

Copyright © 2013 National Society of Professional Engineers, American Council of Engineering Companies, and American Society of Civil Engineers. All rights reserved.

18.04 *Limitation of Damages*

A. With respect to any and all Change Proposals, Claims, disputes subject to final resolution, and other matters at issue, neither Owner nor Engineer, nor any of their officers, directors, members, partners, employees, agents, consultants, or subcontractors, shall be liable to Contractor for any claims, costs, losses, or damages sustained by Contractor on or in connection with any other project or anticipated project.

18.05 *No Waiver*

A. A party's non-enforcement of any provision shall not constitute a waiver of that provision, nor shall it affect the enforceability of that provision or of the remainder of this Contract.

18.06 *Survival of Obligations*

A. All representations, indemnifications, warranties, and guarantees made in, required by, or given in accordance with the Contract, as well as all continuing obligations indicated in the Contract, will survive final payment, completion, and acceptance of the Work or termination or completion of the Contract or termination of the services of Contractor.

18.07 *Controlling Law*

A. This Contract is to be governed by the law of the state in which the Project is located.

18.08 *Headings*

A. Article and paragraph headings are inserted for convenience only and do not constitute parts of these General Conditions.

END OF SECTION

Copyright © 2013 National Society of Professional Engineers, American Council of Engineering Companies, and American Society of Civil Engineers. All rights reserved.

SECTION 01 00 00

GENERAL REQUIREMENTS

PART 1 GENERAL

1.1 SCOPE AND INTENT

A. The work to be done consists of the furnishing of all labor, materials, and equipment, and the performance of all work included in this Contract.

B. Work Included:

1. The Contractor shall furnish all labor, superintendence, materials, plant, power, light, heat, fuel, water, tools, appliances, equipment, supplies, shop drawings, working drawings, and other means of construction necessary or proper for performing and completing the work. The Contractor shall obtain and pay for all required permits necessary for the work. The Contractor shall perform and complete the work in the manner best calculated to promote rapid construction consistent with safety of life and property and to the satisfaction of the Town, and in strict accordance with the Contract Documents. The Contractor shall clean up the work and maintain it during and after construction, until accepted, and shall do all work and pay all incidental costs. The Contractor shall repair or restore all structures and property that may be damaged or disturbed during performance of the work.

2. The cost of incidental work described in these General Requirements, for which there are no specific Contract Items, shall be considered as part of the general cost of doing the work and shall be included in the prices for the various Contract Items. No additional payment will be made.

3. The Contractor shall be solely responsible for the adequacy of their workmanship, materials, and equipment.

1.2 SPECIFICATIONS

A. Copies Furnished to Contractor:

1. The Contractor shall furnish each of the subcontractors, manufacturers, and suppliers such copies of the Contract Documents as may be required for their work. Additional copies of the Specifications, when requested, may be furnished to the Contractor at cost of reproduction.

B. Supplementary Drawings:

1. When, in the opinion of the Town, it becomes necessary to explain more fully the work to be done, or to illustrate the work further, or to show any changes which may be required, drawings known as Supplementary Drawings, with specifications pertaining thereto, will be prepared by the Town, and five paper prints thereof will be given to the Contractor.

C. Contractor to Check Data:

1. The Contractor shall verify all details shown on the Specifications or other data received from the Town, and shall notify them of all errors, omissions, conflicts, and discrepancies found therein. Failure to discover or correct errors, conflicts, or discrepancies shall not relieve the Contractor of full responsibility for unsatisfactory work, faulty construction, or improper operation resulting therefrom, nor from rectifying such conditions at their own expense. They will not be allowed to take advantage of any errors or omissions, as full instructions will be furnished by the Town, should such errors or omissions be discovered. All schedules are given for the convenience of the Town and the Contractor and are not guaranteed to be complete. The Contractor shall assume all responsibility for the making of estimates of the size, kind, and quality of materials and equipment included in work to be done under the Contract.

D. Intent

1. Work not specified in the Specifications but involved in carrying out their intent or in the complete and proper execution of the work is required and shall be performed by the Contractor as though it were specifically delineated or described.

2. The apparent silence of the Specifications as to any detail, or the apparent omission from them of a detailed description concerning any work to be done and materials to be furnished, shall be regarded as meaning that only the best general practice is to prevail and that only material and workmanship of the best quality is to be used, and interpretation of these Specifications shall be made upon that basis.

3. The inclusion of the Related Requirements (or work specified elsewhere) in the General part of the specifications is only for the convenience of the Contractor and shall not be interpreted as a complete list of related Specification Sections.

1.3 INSPECTION AND TESTING

A. General

1. Inspection and testing of materials will be performed by the Town unless otherwise specified.

2. For tests specified to be made by the Contractor, the testing personnel shall make the necessary inspections and tests, and the reports thereof shall be in such form as will facilitate checking to determine compliance with the Contract Documents. Three (3) electronic / PDF copies of the reports shall be submitted, and authoritative certification thereof must be furnished to the Town as a prerequisite for the acceptance of any material or equipment.

3. If, in the making of any test of any material or equipment, it is ascertained by the Town that the material or equipment does not comply with the Contract, the Contractor will be notified thereof and they will be directed to refrain from delivering said material or equipment, or to remove it promptly from the site or from the work and replace it with acceptable material, without cost to the Town.

4. Tests of electrical and mechanical equipment and appliances shall be conducted in accordance with recognized test codes of the ANSI, ASME, or the IEEE, except as may otherwise be stated herein.

5. The Contractor shall be fully responsible for the proper operation of equipment during tests and instruction periods and shall neither have nor make any claim for damage which may occur to equipment prior to the time when the Town formally takes over the operation thereof.

B. Costs

1. All inspection and testing of materials furnished under this Contract will be performed by the Town or duly authorized inspection engineers or inspection bureaus without cost to the Contractor, unless otherwise expressly specified.

2. The cost of shop and field tests of equipment and of certain other tests specifically called for in the Contract Documents shall be borne by the Contractor, and such costs shall be deemed to be included in the Contract price.

3. Materials and equipment submitted by the Contractor as equivalent to those specifically named in the Contract may be tested by the Town for compliance. The Contractor shall reimburse the Town for the expenditures incurred in making such tests on materials and equipment that are rejected for non-compliance.

D. Certificate of Manufacture

1. When inspection is waived or when the Town so requires, the Contractor shall furnish to them authoritative evidence in the form of Certificates of Manufacture that the materials to be used in the work have been manufactured and tested in conformity with the Contract Documents. These certificates shall be notarized and shall include copies of the results of physical tests and chemical analyses, where necessary, that have been made directly on the product or on similar products of the manufacturer.

E. Failure of Tests

1. Any defects in the materials and equipment or their failure to meet the tests, guarantees, or requirements of the Contract Documents shall be promptly corrected by the Contractor. The decision of the Town as to whether the Contractor has fulfilled their obligations under the Contract shall be final and conclusive. If the Contractor fails to make these corrections or if the improved materials and equipment, when tested, shall again fail to meet the guarantees of specified requirements, the Town, notwithstanding its partial payment for work, materials, and equipment, may reject the materials and equipment and may order the Contractor to remove them from the site at their own expense.

2. In case the Town rejects any materials and equipment, then the Contractor shall replace the rejected materials and equipment within a reasonable time. If they fail to do so, the Town may, after the expiration of a period of thirty (30) calendar days after giving them notice in writing, proceed to replace such rejected materials and equipment, and the cost thereof shall be deducted from any compensation due or which may become due the Contractor under their Contract.

F. Final Inspection

1. During such final inspections, the work shall be clean and free from water. In no case will the final pay application be prepared until the Contractor has complied with all requirements set forth and the Town has made their final inspection of the entire work and is satisfied that the entire work is properly and satisfactorily constructed in accordance with the requirements of the Contract Document.

END OF SECTION

SECTION 01 03 00

SPECIAL PROJECT PROCEDURES

PART 1 GENERAL

1.1 WORKMANSHIP, MATERIAL, AND EQUIPMENT

A. When a particular product is specified or called for, it is intended and shall be understood that the proposal tendered by the Contractor included those products in his bid. The alternate product or products submitted by the Contractor shall meet the requirements of the specifications and shall, in all respects, be equal to the products specified by name herein.

B. All apparatus, mechanism, equipment, machinery, and manufactured articles for incorporation into the Work shall be the new and unused standard products of recognized reputable Manufacturers.

1.2 RESPONSIBILITY OF CONTRACTOR

A. The Contractor shall be responsible for the entire Work determined by the Drawings, Specifications, and Contract from the date of the start of the Work until it is accepted as evidence of approval of the Completion Certificate by the Owner. Contractor shall be responsible for removals, renewals and replacements due to action of the elements and all other causes except as otherwise provided in the Specifications. The Contractor shall keep the Contract under his own control and it shall be his responsibility to see that the Work is properly supervised and carried on faithfully and efficiently. The Contractor shall supervise the work personally or shall have a competent, English-speaking superintendent or representative, who shall be on the site of the project at all working hours, and who shall be fully authorized by the Contractor to direct the performance of the work and to make arrangements for all necessary materials, equipment, and labor without delay.

B. Renewals or repairs necessitated because of defective materials or workmanship, or due to action of the elements or other natural causes, including fire and flood, prior to the acceptance as determined by the Completion Certificate, as appropriate, shall be done anew in accordance with the Contract and Specifications at the expense of the Contractor.

1.3 PROVISIONS FOR CONTROL OF EROSION

A. Sufficient precautions shall be taken during construction to minimize the run-off of polluting substances such as silt, clay, fuels, oils, bitumens, calcium chloride, or other polluting materials harmful to humans, fish, or other life, into the supplies and surface waters of the state. Control measures must be adequate to ensure that turbidity in the receiving water will not be increased more than 10 nephelometric turbidity units (NTUs), or as otherwise required by the state or other controlling body, in water used for public water supply or fish, unless limits have been established for the particular water. In surface water used for other purposes, the turbidity must not exceed 25 NTU unless otherwise permitted. Special precautions shall be taken in the use of construction equipment to prevent operations that promote erosion.

B. Erosion evident within the limits of construction shall be the responsibility of the Contractor during the full term of the contract and for the full two (2) year guarantee period. Areas subject to erosion during this time shall be fully restored to original or design conditions (as applicable) within 10 days of notice to the Contractor.

1.4 ON SITE STORAGE

A. The Contractor's attention is invited to special storage requirements and possible charges for noncompliance of on-site storage requirements for materials and equipment as specified in Section 01600.

1.5 WARRANTIES

A. Unless specified otherwise in the Contract Documents, all equipment supplied under these Specifications shall be warranted by the Contractor and the equipment Manufacturers for a period of two (2) years. Warranty period shall commence on the date of final acceptance by the Brevard County Board of County Commissioners.

B. The equipment shall be warranted to be free from defects in workmanship, design and materials. If any part of the equipment should fail during the warranty period, it shall be replaced in the machine(s) and the unit(s) restored to service at no expense to the Owner.

C. The Manufacturer's warranty period shall run concurrently with the Contractor's warranty or guarantee period. No exception to this provision shall be allowed. The Contractor shall be responsible for obtaining equipment warranties in accordance with Section 01 78 00 – Warranties and Bonds from each of the respective suppliers or Manufacturers for all the equipment specified. The form of warranty is included at the end of this section.

1.6 UTILITY CROSSINGS

A. It is intended that wherever existing utilities such as water, chemical, electrical or other service lines must be crossed, deflection of the pipe within recommended limits and cover shall be used to satisfactorily clear the obstruction unless otherwise indicated on the Drawings.

B. However, when in the opinion of the Owner or Engineer this procedure is not feasible, Contactor may employ fittings for a utility crossing as directed by the Engineer.

1.7 CONSTRUCTION CONDITIONS AND SUBSURFACE INVESTIGATION

A. The Contractor shall strictly adhere to the specific requirements of the governmental unit(s) or agency(ies) having jurisdiction over the work. Wherever there is a difference in the requirements of a jurisdictional body and these Specifications, the more stringent shall apply.

B. The Contractor shall be responsible for having determined to his satisfaction, prior to the submission of his bid, the nature and location of the work, the conformation of the ground, the character and quality of the substrata, the types and quantity of materials to be encountered, the nature of the groundwater conditions, the character of equipment and facilities needed preliminary to and during the prosecution of the work, the general and local conditions and all other matters which can in any way affect the work under this contract. The prices established for the work to be done will reflect all costs pertaining to the work. Any claims for extras based on substrata, groundwater table, and other such conditions will not be allowed.

1.9 PUBLIC NUISANCE

A. The Contractor shall not create a public nuisance including but not limited to encroachment on adjacent lands, flooding of adjacent lands, excessive noise, excessive and avoidable vibration, or unnecessary and avoidable impacts to motorists, bicyclists, and pedestrians utilizing the private residential or business access streets, driveways and parking lots in and adjacent to the project. The Contractor is advised to review and comply with all of the special vehicle and pedestrian MOT requirements for this project.

B. If the Contractor requires the use of adjacent lands, a temporary easement or written contract with the property owner must first be negotiated, secured, paid for, and obtained by the Contractor. This requirement applies to work areas and to lay down, staging, and temporary storage or office areas.

C. Dewatering activities and any other construction process or method which produces ground water or storm water runoff from the project site shall be conducted in a manner which prevents flooding of adjacent lands. All excess water from any source shall be directed to appropriate drainage systems capable of accommodating the excess flows as permitted and approved.

D. Sound levels measured by the Owner shall not exceed 55 dBA 7 PM to 7 AM or 65 dBA 7 AM to 7 PM. This sound level is to be measured at the Owner's property line. It is the obligation of the Contractor to achieve these limits through proper construction equipment selection, temporary sound attenuation barriers, or other acceptable means. Sound levels in excess of these values are sufficient cause to have the work halted until equipment can be quieted to these levels. Work stoppage by the Engineer or Owner due to excessive noise shall not relieve the Contractor of the other portions of this specification including, but not limited to Contract Time and Contract Price.

E. In establishing Maintenance of Traffic Plans, work task schedules, and construction methods, the Contractor must fully consider minimizing impacts to motorists and pedestrians. At no time shall methods, procedures or schedules be approved or employed which will create undue hardship to the adjacent business patrons or other members of the public using the access streets, sidewalks, bus stops, or parking lots.

Work stoppage by the Engineer or Owner due to unnecessary public impacts shall not relieve the Contractor of the other portions of this specification including, but not limited to contract time and contract price.

F. No extra charge may be made for time lost due to work stoppage resulting from the creation of a public nuisance.

1.10 SUSPENSION OF WORK DUE TO WEATHER

A. During inclement weather, all work which might be damaged or rendered inferior by such weather conditions shall be suspended. The orders and decisions of the Engineer as to suspensions shall be final and binding. The ability to issue such an order shall not be interpreted as a requirement to do so. During suspension of the work from any cause, the work shall be suitably covered and protected so as to preserve it from injury by the weather or otherwise; and, if the Engineer shall so direct, the rubbish and surplus materials shall be removed.

1.11 RELOCATIONS

A. The Contractor shall be responsible for the relocation of structures, including but not limited to light poles, signs, sign poles, fences, piping, conduits and drains that interfere with the positioning of the work as set out on the Drawings. The cost of all such relocations shall be included in the bid with the associated item requiring the relocations.

1.12 SALVAGE

A. Any existing equipment or material, including but not limited to, valves, pipes, fittings, couplings, etc., which is removed or replaced as a result of construction under this project may be designated as salvage by the Engineer or Owner and if so, shall be excavated, if necessary and delivered, to the Owner at a location directed by the Owner, at the Contractor's expense. All such salvage shall be at the Owner's discretion. Items refused by the Owner shall become the property of or shall be properly disposed of by the Contractor.

1.13 PERMITS

A. Upon notice of award, the Contractor shall immediately apply for all applicable permits not previously obtained by the Owner to do the work from the appropriate governmental agency or agencies. (See also Section 01065.) No work shall commence until all applicable permits have been obtained and copies delivered to the Engineer. Except as provided elsewhere in these Contract Documents, the costs for obtaining all permits shall be borne by the Contractor.

1.14 NOTIFICATION OF WORK ON EXISTING FACILITIES

A. Before commencing work on any of the existing structures or equipment, the Contractor shall notify the Engineer, in writing, at least 10 calendar days in advance of the date he proposes to commence such work.

1.15 EASEMENT FOR WORK ON PRIVATE PROPERTY

A. The Contractor shall maintain construction operations within the presently existing property boundaries, road rights-of-way, and established easements throughout the project. Immediately after an award of contract is made, the Contractor shall submit to the Owner a listing of those areas in which Contractor deems it to be necessary to work outside of the prescribed areas. In the event that the Contractor deems it necessary or advisable to operate beyond the limits of the existing property boundaries, rights-of-way or established easements, Contractor shall be responsible for making special agreements with the affected property owners. The Contractor's plan shall be subject to the approval of the Owner and as construction areas are secured, copies of all written agreements shall be placed on file with the Owner and Engineer.

B. With the exception of any Temporary Construction Easement already provided, the Owner **will not** secure easements for additional working room.

1.16 CLAIMS FOR PROPERTY DAMAGE

A. Upon notification by the Owner or Engineer, the Contractor shall investigate each claim for property damage and shall file, within ten (10) days of such notification, a statement with Owner and Engineer setting forth all facts and details relative to such claim.

1.17 EXISTING UNDERGROUND PIPING, STRUCTURES, AND UTILITIES

A. The locations of existing underground utilities are from information obtained from the respective utility companies and other sources. The locations are shown without express or implied representation, assurance, or guarantee that they are complete or correct or that they represent a true picture of underground piping to be encountered. It is the Contractor's responsibility to contact the state-sponsored central locate center and/or local existing utilities at least 48 hours prior to planned digging.

1.18 CLEAN-UP AND DUST CONTROL

A. At all times during the prosecution of the work, the Contractor shall maintain sufficient forces to clean up and control dust. Control of blowing litter or dust caused by any re-grading or other task by the Contractor shall be the responsibility of the Contractor.

1.19 CONNECTIONS TO EXISTING SYSTEMS

A. The Contractor shall perform all work necessary to locate, excavate, and prepare for connections to the terminus of the existing systems all as shown on the Drawings or where directed by the Engineer. The cost of this work and for the actual connection of the existing mains shall be included in the bid for the project and shall not result in any additional cost to the Owner.

1.20 COORDINATION OF WORK

A. The Contractor shall afford other contractors and the Owner reasonable opportunity for the introduction and storage of their materials and equipment and the execution of their work and shall properly connect and coordinate the Work with such other work. The Contractor shall coordinate his Work with the Owner and other contractors to store apparatus, materials, supplies and equipment in such orderly fashion at the site of the Work as will not unduly interfere with the progress of the Work or the work of any other contractors.

B. If the execution or result of any part of the Work depends upon any work of the Owner or of any separate contractor, the Contractor shall, prior to proceeding with the Work, inspect and promptly report to the Owner in writing any apparent discrepancies or defects in such work of the Owner or of any separate contractor that render it unsuitable for the proper execution or result of any part of the Work.

C. Failure of the Contractor to so inspect and report shall constitute an acceptance of the Owner's or separate contractor's work as fit and proper to receive the Work.

D. Should the Contractor cause damage to the work or property of the Owner or of any separate contractor on the Project, or to other work on the Site, or delay or interfere with the Owner's work on ongoing operations or facilities or adjacent facilities or said separate contractor's work, the Contractor shall be liable for the same; and, in the case of another contractor, the Contractor shall attempt to settle said claim with such other contractor prior to such other contractor's institution of litigation or other proceedings against the Contractor.

E. If such separate contractor sues the Owner on account of any damage, delay or interference caused or alleged to have been so caused by the Contractor, the Owner shall notify the Contractor, who shall defend the Owner in such proceedings at the Contractor's expense. If any judgment or award is entered against the Owner, the Contractor shall satisfy the same and shall reimburse the Owner for all damages, expenses, attorney's fees and other costs which the Owner incurs as a result thereof.

F. Should a separate contractor cause damage to the Work or to the property of the Contractor or cause delay or interference with the Contractor's performance of the Work, the Contractor shall present directly to said separate contractor any claims it may have as a result of such damage, delay or interference (with an information copy to the Owner) and shall attempt to settle its claim against said separate contractor prior to the institution of litigation or other proceedings against said separate contractor.

G. In no event shall the Contractor seek to recover from the Owner or the Engineer, and the Contractor hereby represents to the Owner and the Engineer that it will not seek to recover from them, or either of them, any costs, expenses, (including, but not limited to, attorney's fees) or losses of profit incurred by the Contractor as a result of any damage to the Work or property of the Contractor or any delay or interference caused or allegedly caused by any separate contractor.

H. Any difference or conflict which may arise between the Contractor and other contractors who may be performing work on behalf of the Owner, or between the Contractor and workmen of the Owner in regard to their work, shall be adjusted and

determined by the Engineer. If the work of the Contractor is delayed because of any acts of omissions of any other contractor of the Owner, the Contractor shall on that account have no claim against the Owner other than for an extension of time.

1.21 FINAL GUARANTEE

A. All work shall be guaranteed by the Contractor for a period of two years from and after the date of acceptance of the work by the Owner.

B. If, within the guarantee period, repairs or changes are required in connection with guaranteed work, which, in the opinion of the Engineer, is rendered necessary as the result of the use of materials, equipment or workmanship which are inferior, defective, or not in accordance with the terms of the Contract, the Contractor shall, promptly upon receipt of notice from the Owner and without expense to the Owner, do the following:

1. Place in satisfactory condition in every particular all of such guaranteed work and correct all defects therein.

2. Make good all damage to the building or site, or equipment or piping or contents thereof, which, in the opinion of the Engineer, is the result of the use of materials, equipment or workmanship which are inferior, defective, or not in accordance with the terms of the contract.

3. Make good any work or material, or the equipment and contents of building, structure or site disturbed in fulfilling any such guarantee.

C. If the Contractor, after notice, fails within ten days to proceed to comply with the terms of this guarantee, the Owner may have the defects corrected, and the Contractor and his surety shall be liable for all expense incurred, provided, however, that in case of an emergency where, in the opinion of the Owner, delay would cause loss or damage, repairs may be started without notice being given to the Contractor and the Contractor shall pay the cost thereof.

D. All special guarantees or warranties applicable to specific parts of the work as may be stipulated in the Contract Specifications or other papers forming a part of this Contract shall be subject to the terms of this paragraph during the first year of life of each such guarantee. All special guarantees and manufacturers' warranties shall be assembled by the Contractor and delivered to the Engineer, along with a summary list thereof, before the acceptance of the work.

1.22 RIGHTS IN AND USE OF MATERIALS FOUND ON THE WORK

A. The Contractor, with the approval of the Engineer, may use on the project such stone, gravel, sand, or other material determined suitable by the Engineer, as may be found in the excavation and will be paid both for the excavation of such materials at the corresponding Contract unit price and for the pay item for which the excavated material is used. Contractor shall replace at his own expense with other acceptable material all of that portion of the excavation materials so removed and used which was needed for use in the embankments, backfills, approaches, or otherwise. No charge for the materials so used will be made against the Contractor.

PART 2 PRODUCTS (NOT USED)

PART 3 EXECUTION (NOT USED)

END OF SECTION

SECTION 01 04 70

MODIFICATIONS TO EXISTING STRUCTURES, PIPING AND EQUIPMENT

PART 1 GENERAL

1.1 SCOPE OF WORK

A. Furnish all labor, materials, equipment and incidentals required to modify, alter and/or convert existing structures as shown or specified and as required for the installation of new mechanical equipment, piping and appurtenances. Work shall be performed within the requirements of Special Project Procedures in Section 01 03 00 and required Construction Scheduling in Section 01 32 16. Existing piping and equipment shall be removed and dismantled as necessary for the performance of structural alterations in accordance with the requirements herein specified and shown on the Drawings.

1.2 RELATED WORK

A. Related Specification Sections include, but are not necessarily limited to:

1. 01 03 00, Special Project Procedures
2. 01 00 00, Summary of Work
3. 01 32 16, Construction Progress Schedule
4. 01 33 00, Submittal Procedures
5. 01 45 23, Testing and Inspection Services
6. 01 50 00, Temporary Facilities and Controls
7. 01 53 00, Protection of Existing Facilities
8. 01 77 19, Closeout Requirements
9. 01 78 39, Project Record Documents
10. 02 41 14, Utility Removal – Abandonment
11. 09 90 00, Paintings and Coatings
12. 33 05 10, Utility Trench Excavation, Embedding, and Backfill

PART 2 PRODUCTS (NOT USED)

PART 3 EXECUTION

3.1 GENERAL

A. The Contractor shall cut, repair, reuse, excavate, demolish, or otherwise remove parts of the existing structures or appurtenances, as indicated on the Contract Drawings, herein specified, or necessary to permit completion of the work under this Contract.

B. Blasting with explosives will not be permitted to complete any work under this Contract. Care shall be taken not to damage any part of existing buildings, foundations and exterior structures both below and above ground.

C. No existing structure, equipment, or appurtenance shall be shifted, cut, removed, or otherwise altered except with the express approval of and to the extent approved by the Engineer.

D. When removing materials or portions of existing structures and when making openings in walls and partitions, the Contractor shall take all precautions and use all necessary barriers and other protective devices so as not to damage the structures beyond the limits necessary for the new work, nor to damage the structures or contents by falling or flying debris.

E. Materials and equipment removed in the course of making alterations and additions shall remain the property of the Owner, except that items not salvageable or not identified as Owner salvage, as determined by the Engineer and the Owner, shall become the property of the Contractor to be disposed of by Contractor off the site of the work at Contractor's own place of disposal.

F. All work of altering existing structures shall be done at such time and in such manner as will comply with the approved time schedule. So far as possible before any part of the work is started, all tools, equipment, and materials shall be assembled and made ready so that the work can be completed without delay.

G. All workmanship and new materials involved in constructing the alterations shall conform to the General Specifications for the classes of work insofar as such specifications are applicable.

H. All cutting of existing masonry or other material to provide suitable bonding to new work shall be done in a manner to meet the requirements of the respective section of these specifications covering the new work. When not covered, the work shall be carried on in the manner and to extent directed by the Engineer.

I. Where holes in existing masonry are required to be sealed, unless otherwise herein specified, they shall be sealed with grout, cement mortar, or concrete. The sides of the openings shall be provided with keyed joints and shall be suitably roughened to furnish a good bond and make a watertight joint. All loose or unsound material adjacent to the opening shall be removed and, if necessary, replaced with new material. The method of placing the mortar seal shall provide a suitable means of releasing entrapped air.

J. Surfaces of seals visible in the completed work shall be made to match as nearly as possible the adjacent surfaces.

K. Nonshrink grout shall be used for setting wall castings, sleeves, leveling pump bases, doweling anchors into existing concrete and elsewhere as shown.

L. Operating equipment shall be thoroughly cleaned and then lubricated and greased for protection during prolonged storage.

M. The Contractor shall provide flumes, hoses, piping, etc., to divert or provide suitable plugs, bulkheads, or other means to hold back the flow of wastewater, water, or other liquids, all as required in the performance of the work under this Contract.

3.2 CONNECTING TO EXISTING PIPING AND EQUIPMENT

A. The Contractor shall verify the exact location, material, alignment, joint, etc. of existing piping and equipment prior to making the connections called out in the Drawings. The verifications shall be performed with adequate time to correct any potential alignment or other problems prior to the actual time of connection.

B. The Contractor shall dismantle and remove all existing walkways, supports, equipment, piping, and other appurtenances required for the completion of the work. Where called for or required, Contractor shall cut existing pipelines for the purpose of making connections thereto. Anchor bolts for equipment and structural steel removed shall be cut off one inch below the concrete surface. Surface shall be finished as specified in Division 3.

C. Where necessary or required for the purpose of making connections, the Contractor shall cut existing pipe lines in a manner to provide an approved joint. Where required, Contractor shall weld beads, provide alignment flanges or provide Dresser Couplings, all as needed to accomplish the proposed connections, whether or not such additional items of work are indicated on the drawings.

END OF SECTION

SECTION 01 10 00

SUMMARY OF WORK

PART 1 GENERAL

1.1 SCOPE OF WORK

Unless otherwise expressly provided in the Contract Documents, the Work must be performed in accordance with best modern practice, with materials and workmanship of the highest quality to the satisfaction of the Owner.

A. The Project title is Greenville Water Treatment Plant Upgrades

B. The Work of this Project is defined in the agreement.

C. The Specification divisions and Drawings are an integrated part of the Contract Documents and, as such, will not stand alone if used independently as individual sections, divisions, or drawing sheets. The Drawings and Specifications establish minimum standards of quality for this project. They do not purport to cover all details entering into the design and construction of materials and equipment.

1.2 REFERENCE STANDARDS

Reference standards and recommended practices referred to herein shall be the latest revision of any such document in effect at the bid time. The following documents are a part of this Section. Where this Specification section differs from these documents, the requirements of this Section shall apply.

A. American Concrete Institute (ACI)

B. American Institute of Steel Construction (AISC)

C. American Iron and Steel Institute (AISI)

D. American National Standards Institute (ANSI)

E. American Standards Association (ASA)

F. American Society of Mechanical Engineers (ASME)

G. American Society of Testing and Material (ASTM)

H. American Water Works Association (AWWA)

I. American Welding Society (AWS)

J. Anti-Friction Bearing Manufacturer's Association (AFBMA)

K. Building Officials and Code Administrators International, Inc. (BOCA)

L. Construction Specifications Institute (CSI)

M. Federal Specification (FS)

N. Florida Department of Transportation (FDOT) Standard Specifications for Road and Bridge Construction, Latest English Edition (Standard Specifications)

O. Geosynthetics Institute (GSI)

P. National Bureau of Standards (NBS)

Q. National Electrical Manufacturer's Association (NEMA)

R. National Fire Protection Association (NFPA)

S. Portland Cement Association (PCA)

T. Occupational Safety and Health Act (Public Law 91-596), U.S. Department of Labor (OSHA)

U. Steel Structures Painting Council (SSPC)

V. Underwriters' Laboratories, Inc. (UL)

W. United States of America Standards Institute (USASI)

X. All local, state, county, or municipal building codes requirements of the Owner's Insurance

1.3 QUALITY ASSURANCE (NOT USED)

1.4 WARRANTIES

A. Warranties shall be in accordance with General Conditions, Supplementary Conditions, and Specification Section 01 78 00, Warranties and Bonds.

1.5 DELIVERY, STORAGE, AND HANDLING

A. The Contractor shall adhere to the requirements specified in Section 01 66 00, Product Storage and Handling, for storing and protecting the items specified in this Section.

1.6 GENERAL REQUIREMENTS

A. Unless otherwise specified on the Construction Drawings or Specifications, all work and the quality of materials shall conform to the referenced sections of the Florida Department of Transportation (FDOT) *Standard Specifications for Road and Bridge Construction, Supplementary Specifications*, and *Roadway and Traffic Design Standards*. The basis of payment shall conform to Section 01200, Measurement and Payment, of the General Requirements.

1.7 WORKING HOURS

A. Workdays shall consist of 12 hours maximum, between 6:00 am and 6:00 pm.

PART 2 PRODUCTS (NOT USED)

PART 3 EXECUTION (NOT USED)

END OF SECTION

SECTION 01 22 13

MEASUREMENT AND PAYMENT

PART 1 GENERAL

1.1 DESCRIPTION

A. The scope of this section of the Contract Documents is to further define the items included in each Bid Item in the Bid Form section of the Contract Documents. Payment will be made based on the specified items included in the Bid Form for each bid item.

B. All contract prices included in the Bid Form section will be full compensation for all shop drawings, working drawings, labor, materials, tools, equipment, and incidentals necessary to complete the construction as shown on the Drawings and/or as specified in the Contract Documents to be performed under this Contract. Actual quantities of each item bid on a unit price basis will be determined upon completion of the construction in the manner set up for each item specified on the Bid Form. Payment for all items listed in the Bid Form will constitute full compensation for all work shown and/or specified to be performed under this Contract.

C. Each lump sum and unit price in the Bid Form shall include an amount considered by Contractor to be adequate to cover Contractor's overhead and profit for each separately identified item.

1.2 ENGINEER'S ESTIMATE OF QUANTITIES

Engineer's estimated quantities for items of Unit Price Work, as included in the Contract, are approximate only and are included solely for the purpose of comparing Bids and pricing. Owner does not expressly or by implication agree that the nature of materials encountered below the ground surface or actual quantities of material encountered or required will correspond with the quantities included in the Contract at the time of award and reserves the right to increase or decrease quantities or to eliminate quantities as Owner may deem necessary. Unless indicated otherwise in the General Conditions, Contractor or Owner will not be entitled to adjustment in price of Unit Price Work items as a result of a change in estimated quantity and agree to accept the unit prices accepted in the Bid as complete and total compensation for additions caused by changes or alterations in the Unit Price Work directed by OWNER.

1.3 ADJUSTMENT OF UNIT PRICES FOR INCREASE OR DECREASE OF ESTIMATED QUANTITIES

A. Increases or decreases in the quantity of an item of Unit Price Work will be determined by comparing the total payable quantity of Unit Price Work 55 with the Engineer's estimated quantity indicated in the Bid Form and Contract Documents.

B. Provisions, if any, regarding adjustment of unit prices due to variations in actual quantities from the estimated quantities awarded with the Contract are in the General Conditions.

1. Engineer's review for possible unit price cost adjustment, when provision for such adjustment is indicated in the General Conditions, will be at a time Engineer deems reasonable and proper.

1.4 WORK OUTSIDE AUTHORIZED LIMITS

No payment will be made for work constructed outside the authorized limits of work.

1.5 MEASUREMENT STANDARDS

Unless otherwise specified for the particular items involved, all measurements of distance shall be taken horizontally or vertically.

1.6 AREA MEASUREMENTS

In the measurement of items to be paid for on the basis of area of finished work, the lengths and/or widths to be used in the calculations shall be the final dimensions measured along the surface of the completed work within the neat lines shown or designated.

1.7 LUMP SUM ITEMS

Where payment for items is shown to be paid for on a lump sum basis, no separate payment will be made for any item of work required to complete the lump sum items. Lump sum contracts shall be complete, tested, and fully operable prior to the request for final payment. Contractor may be required to provide a breakdown of the lump sum totals.

1.07 UNIT PRICE ITEM

Separate payment will be made for the items of work listed on the Bid Form. Any related work not specifically listed, but required for satisfactory completion of the work shall be considered to be included in the scope of the appropriate listed work items.

No separate payment will be made for the following items, and the cost of such work shall be included in the applicable pay items of work. Final payments shall not be requested by the Contractor or made by the City until as-built (record) drawings have been submitted and approved by the City.

A. Shop Drawings, Working Drawings.
B. Clearing, grubbing, and grading except as specified.
C. Trench excavation, including necessary pavement removal and rock removal, except as otherwise specified.
D. Dewatering and disposal of surplus water.
E. Structural fill, backfill, and grading.
F. Replacement of unpaved roadways, and shrubbery plots.
G. Cleanup and miscellaneous work.
H. Foundation and borrow materials.
I. Testing and placing system in operation.
J. Any material and equipment required to be installed and utilized for the tests.
K. Pipe, structures, pavement replacement, asphalt and shell driveways and/or appurtenances included within the limits of lump sum work, unless otherwise shown.
L. Maintaining the existing quality of service during construction.
M. Maintaining or detouring of traffic.
N. Appurtenant work as required for a complete and operable system.
O. Seeding and hydromulching.
P. As-built Record Drawings.

PART 2 PRODUCTS (NOT USED)

PART 3 EXECUTION (NOT USED)

END OF SECTION

SECTION 01 25 00

SUBSTITUTION PROCEDURES

PART 1 GENERAL

1.1 SUMMARY

A. Section Includes:

1. The procedure for requesting the approval of substitution of a product that is not equivalent to a product which is specified by descriptive or performance criteria or defined by reference to one or more of the following:

   a. Name of manufacturer

   b. Name of vendor

   c. Trade name

   d. Catalog number

2. Substitutions are not "or-equals".

B. Related Specification Sections include, but are not necessarily limited to:

1. 01 00 00, Standard General Conditions

2. 01 33 00, Submittal Procedures

1.2 ADMINISTRATIVE REQUIREMENTS

A. Request for Substitution – General

1. Within 10 days after award of Contract (unless noted otherwise), the Owner will consider formal requests from Contractor for substitution of products in place of those specified.

2. Certain types of equipment and kinds of material are described in Specifications by means of references to names of manufacturers and vendors, trade names, or catalog numbers.

   a. When this method of specifying is used, it is not intended to exclude from consideration other products bearing other manufacturer's or vendor's names, trade names, or catalog numbers, provided said products are "or-equals," as determined by Engineer.

3. Other types of equipment and kinds of material may be acceptable substitutions under the following conditions:

   a. Or-equals are unavailable due to strike, discontinued production of products meeting specified requirements, or other factors beyond control of Contractor; or,

   b. Contractor proposes a cost and/or time reduction incentive to the Owner.

1.3 SUBMITTALS

A. See Request for Substitution Form (attached)

B. Procedure for Requesting Substitution

1. Substitution shall be considered only:

a. After award of Contract

b. Under the conditions stated herein

2. Submit one (1) electronic copy of each written request for substitution, including:

a. Documentation

1) Complete data substantiating compliance of proposed substitution with Contract Documents.

2) Data relating to changes in construction schedule, when a reduction is proposed.

3) Data relating to changes in cost.

b. For products

1) Product identification

a) Manufacturer's name.

b) Telephone number and representative contact name.

c) Specification Section or Drawing reference of originally specified product, including discrete name or tag number assigned to original product in the Contract Documents.

2) Manufacturer's literature clearly marked to show compliance of proposed product with Contract Documents.

3) Itemized comparison of original and proposed product addressing product characteristics including, but not limited to:

a) Size

b) Composition or materials of construction

c) Weight

d) Electrical or mechanical requirements

4) Product experience

a) Location of past projects utilizing product.

b) Name and telephone number of persons associated with referenced projects knowledgeable concerning proposed product.

c) Available field data and reports associated with proposed product.

5) Samples

a) Provide at request of Engineer.

b) Samples become the property of the Engineer.

c. For construction methods:

1) Detailed description of proposed method.

2) Illustration drawings.

C. Approval or Rejection

1. The Engineer will provide written approval or rejection of substitution.
2. Engineer reserves the right to require proposed product to comply with color and pattern of specified product if necessary to secure design intent.
3. In the event the substitution is approved, the resulting cost and/or time reduction will be documented by Change Order in accordance with the General Conditions.
4. No additional contract time will be given for substitution.
5. Substitution will be rejected if:

a. Submittal is not through the Contractor with his stamp of approval.

b. Request is not made in accordance with this Specification Section.

c. In the Engineer's opinion, acceptance will require substantial revision of the original design.

d. In the Engineer's opinion, substitution will not perform adequately the function consistent with the design intent.

1.4 QUALITY ASSURANCE

A. In making request for substitution or in using an approved product, the Contractor represents that the Contractor:

1. Has investigated proposed product and has determined that it is adequate or superior in all respects to that specified, and that it will perform function for which it is intended.
2. Will provide the same guarantee for the substitute item as for the product specified.
3. Will coordinate installation of accepted substitution into Work, to include building modifications if necessary, making such changes as may be required for Work to be complete in all respects.
4. Waives all claims for additional costs related to substitution which subsequently arise.

EXHIBIT A
REQUEST FOR SUBSTITUTION FORM:

TO:_____
PROJECT:_____ DATE:_____
We hereby submit for your consideration the following product instead of the specified item for the above project:
SECTION PARAGRAPH SPECIFIED ITEM

_____
Proposed Substitution: _____

Reason for Substitution: _____

Include complete information on changes to Drawings and/or Specifications which proposed substitution will require for its proper installation.

Fill in Blanks Below:

A. Will the undersigned Contractor pay for changes to the design, including engineering and detailing costs caused by the requested substitution?

_____

B. What effect does substitution have on other trades?

_____

C. Differences between proposed substitution and specified item?

_____

D. Differences in product cost or product delivery time?

_____

E. Manufacturer's guarantees of the proposed and specified items are:

_____ Equal _____ Better (explain on attachment)
The undersigned states that the function, appearance, and quality are equivalent or superior to the specified item.

Submitted By:

Signature _____

Firm _____
Address _____

Date _____
Telephone _____

For Use by Engineer

___ Recommended ___ Recommended as noted

___ Not recommended ___Received late
By _____
Date _____
Remarks _____
_____
_____

For Use by Engineer:

_____Approved _____ Rejected
ENGINEER _____ Date _____

END OF SECTION

[THIS PAGE INTENTIONALLY LEFT BLANK]

SECTION 01 32 16

CONSTRUCTION PROGRESS SCHEDULE

PART 1 GENERAL

1.1 SUMMARY

A. Section Includes:

1. General requirements for the preparation, submittal, updating, status reporting, and management of the Construction Progress Schedule

B. Related Specification Sections include, but are not necessarily limited to:

1. 01 03 00, Special Project Procedures
2. 01 00 00, Summary of Work
3. 01 22 13, Measurement and Payment
4. 01 25 00, Substitution Procedures
5. 01 33 00, Submittal Procedures
6. 01 45 23, Testing and Inspection Services
7. 01 77 19, Closeout Requirements

1.2 PRICE AND PAYMENT PROCEDURES

A. Measurement and Payment

1. Work associated with this Item is considered subsidiary to the various items bid. No separate payment will be allowed for this Item.

1.3 SUBMITTALS

A. Electronically submit the preliminary progress schedule in accordance with the General Conditions.

B. Schedule Updates:

1. Overall percent complete, projected, and actual.
2. Completion progress by listed activity and subactivity, to within five (5) working days prior to submittal.
3. Changes in Work scope and activities modified since submittal.
4. Delays in submittals or resubmittals, deliveries, or Work.
5. Adjusted or modified sequences of Work.
6. Other identifiable changes.
7. Revised projections of progress and completion.

1.4 BAR CHART SCHEDULES

A. Format: Bar chart Schedule, to include at least:

1. Identification and listing in chronological order of those activities reasonably required to complete the Work, including:

   a. Subcontract Work.

   b. Major fabrication and delivery dates, including required lead times.

   c. Move-in and other preliminary activities.

   d. Project closeout and cleanup.

   e. Work sequences, constraints, and milestones.

2. Listings identified by Specification Section number.

3. Identification of the following:

   a. Horizontal time frame by year, month, and week.

   b. Duration, early start, and completion for each activity and subactivity.

   c. Critical activities and Project float.

   d. Subschedules to further define critical portions of Work.

B. Sheet Size: 11 inches high x 17 inches wide.

1.5 ADMINISTRATIVE REQUIREMENTS

A. Progress Schedule

1. Update the Progress Schedule monthly and submit with each monthly Application for Payment.

2. Prepare the Schedule Narrative to accompany the monthly Progress Schedule.

3. Change Orders

   a. Incorporate approved change orders, resulting in a change of contract time, in the Schedule.

B. Indicate changes required to maintain the Date of Final Completion.

1. If no written statement of the steps intended to be taken is submitted when so requested, the Engineer or Owner may direct the Contractor to increase the level of effort in manpower (trades), equipment, and work schedule (overtime, weekend, and holiday work, etc.) to be employed by the Contractor in order to remove or arrest the delay to the approved schedule.

   a. No additional cost for such work will be considered.

C. Coordinating Schedule with Other Contract Schedules

1. Where work is to be performed under this Contract concurrently with or contingent upon work performed on the same facilities or area under other contracts, the Schedule shall be coordinated with the schedules of the other contracts.

   a. Obtain the schedules of the other appropriate contracts from the Owner or Engineer for the preparation and updating of the Schedule, and make the required changes when required by changes in corresponding schedules.

2. In case of interference between the operations of different contractors, the Engineer will determine the work priority of each contractor and the sequence of work necessary to expedite the completion of the entire Project.

   a. In such cases, the decision of the Engineer shall be accepted as final.

   b. The temporary delay of any work due to such circumstances shall not be considered as justification for claims for additional compensation.

1.6 QUALITY ASSURANCE

A. The person preparing and revising the construction Progress Schedule shall be experienced in the preparation of schedules of similar complexity.

B. Schedule and supporting documents addressed in this Section shall be prepared, updated, and revised to accurately reflect the performance of the construction.

C. Contractor is responsible for the quality of all submittals in this Section meeting the standard of care for the construction industry for similar projects.

END OF SECTION

SECTION 01 32 33

PRECONSTRUCTION PHOTOGRAPHS AND VIDEO

PART 1 GENERAL

1.1 SUMMARY

A. Section Includes:

1. Administrative and procedural requirements for:
   a. Preconstruction Photography.
   b. Preconstruction Videos.

B. Related Specification Sections include, but are not necessarily limited to:

1. 01 04 70, Modifications to Existing Structures, Piping, and Equipment
2. 01 53 00, Protection of Existing Facilities
3. 01 77 19, Closeout Requirements
4. 01 78 39, Project Record Documents
5. 02 41 14, Utility Removal – Abandonment
6. 33 05 10, Utility Trench Excavation, Embedding, and Backfill

1.2 ADMINISTRATIVE REQUIREMENTS

A. Preconstruction Video

1. Produce a preconstruction video of the site/alignment, including all areas in the vicinity of and to be affected by construction.
2. Retain a copy of the preconstruction video until the end of the maintenance surety period.
3. Produce digital preconstruction video recordings of the Project site and adjacent areas that may be affected by construction activities. Clearly document existing conditions of:
   a. Pavement and sidewalks
   b. Curbs and gutters
   c. Drainage structures and swales
   d. Utilities and appurtenances
   e. Existing buildings and structures
   f. Fencing, landscaping, and site improvements
   g. Areas of proposed excavation, construction access, staging, and utility installation

4. Record video in a continuous format with sufficient clarity and lighting to accurately document existing conditions. Narration identifying location, direction of travel, and notable site features is recommended.
5. Include date and time stamp within video metadata or file naming convention.
6. Submit electronic copies of video recordings to Engineer prior to beginning construction activities in the documented area.
7. Retain copies of video recordings until expiration of the maintenance/warranty period or final resolution of all claims related to damaged property, whichever occurs later.
8. Video documentation does not relieve Contractor of responsibility to protect existing facilities, structures, utilities, and adjacent property.

B. Preconstruction Photographs

1. Prior to commencement of construction activities, provide digital preconstruction photographs of the Project site and adjacent areas that may be affected by the Work. Photographs shall adequately document existing conditions of:
   a. Pavement and sidewalks
   b. Curbs and gutters
   c. Drainage structures and swales
   d. Utilities and appurtenances
   e. Existing buildings and structures
   f. Fencing, landscaping, and site improvements
   g. Areas of proposed excavation, construction access, staging, and utility installation
2. Provide digital images in JPEG (JPG) format with a minimum resolution of 1600 by 1200 pixels. Images shall be clear, in focus, and adequately depict existing site conditions.
3. Include date and time stamp in image metadata or identify the date photographs were taken within the file naming convention or accompanying photo log.
4. Label image files with project name, location or activity, direction of view if applicable, and date photograph was taken.
5. If file naming does not adequately identify photograph information, provide an accompanying photo log identifying photograph number, date taken, location, direction of view, and brief description.
6. Submit electronic copies of preconstruction photographs to Engineer prior to beginning construction activities in the documented area.
7. Retain copies of preconstruction photographs until expiration of the maintenance/warranty period or final resolution of claims related to damaged property, whichever occurs later.

C. Construction Photographs

1. Submit Construction Photographs in accordance with Section 01 33 00, Submittals.

D. Views and Quantities Required:

1. Two (2) views of each item listed in Article 1.2.A.3 above.
2. Five (5) views of overall Project Site weekly, where Work is in progress.
3. Each time photographs are taken, at least one (1) photograph shall be taken from the same overall view as was taken during the previous photograph session.
4. The Contractor shall consult with the Engineer for instructions concerning views required.

E. Electronic Photo Files:

1. The Contractor shall maintain electronic photo files of the photos and convey copies of the files to the Engineer within thirty (30) days after Final Completion of the entire Project.
2. If requested, the Contractor shall furnish additional prints to Owner and the Engineer at commercial rates prevailing at time of purchase.

END OF SECTION

SECTION 01 30 00

SUBMITTALS

PART 1 - GENERAL

1.1 DEFINITIONS

A. Action Submittals: Written and graphic information and physical samples that require Engineer's responsive action.

B. Informational Submittals: Written and graphic information and physical Samples that do not require Engineer's responsive action. Submittals may be rejected for not complying with requirements.

1.2 SUBMITTAL PROCEDURES

A. Transmit each submittal with the Engineer-accepted form.

B. One (1) electronic copy of each submittal shall be transmitted to the Engineer. The electronic copy shall be in Portable Document Format (.pdf) (PDF) unless otherwise specified.

C. Sequentially number transmittal forms. Mark revised submittals with the original number and sequential alphabetic suffix.

D. Identify: Project, Contractor, Subcontractor, and Supplier, pertinent Drawing and detail number, and Specification Section number appropriate to submittal.

E. Apply Contractor's stamp, signed or initialed, certifying that review, approval, verification of products required, field dimensions, adjacent construction Work, and coordination of information are according to the requirements of the Work and Contract Documents.

F. Schedule submittals to expedite Project and deliver to the Engineer. Coordinate submission of related items.

G. Identify variations in Contract Documents and product or system limitations that may be detrimental to successful performance of completed Work.

H. Allow space on submittals for Contractor and Engineer review stamps.

I. When revised for resubmission, identify changes made since the previous submission.

J. Distribute copies of reviewed submittals as appropriate. Instruct parties to promptly report inability to comply with requirements.

K. Incomplete Submittals: Engineer will not review. Complete submittals for each item are required. Delays resulting from incomplete submittals are not the responsibility of the Engineer.

1.3 PROPOSED PRODUCT LIST

A. Within fifteen (15) days after the date of Notice to Proceed, submit a list of major products proposed for use, with the name of the manufacturer, trade name, and model number of each product.

B. For products specified only by reference standards, indicate manufacturer, trade name, model or catalog designation, and reference standards.

1.4 PRODUCT DATA

A. Product Data: Action Submittal: Submit to the Engineer for review for assessing conformance with the information given and design concept expressed in Contract Documents.

B. One (1) electronic copy of each submittal shall be transmitted to the Engineer. The electronic copy shall be in PDF unless otherwise specified.

C. Mark each copy to identify applicable products, models, options, and other data. Supplement manufacturers' standard data to provide information specific to this Project.

D. Indicate product utility and electrical characteristics, utility connection requirements, and location of utility outlets for service for functional equipment and appliances.

E. After review, produce copies and distribute according to 1.2 "Submittal Procedures" Article and for record documents described in Section 01 77 19 - Execution and Closeout Requirements.

1.5 ELECTRONIC CAD FILES OF PROJECT DRAWINGS

A. Electronic CAD Files of Project Drawings: May only be used to expedite production of Shop Drawings for the Project. Use for other Projects or purposes is not allowed.

B. Electronic CAD Files of Project Drawings: Distributed only under the following conditions:

1. Use of files is solely at the receiver's risk. Engineer does not warrant accuracy of files. Receiving files in electronic form does not relieve receiver of responsibilities for measurements, dimensions, and quantities set forth in Contract Documents. In the event of ambiguity, discrepancy, or conflict between information on electronic media and that in Contract Documents, notify Engineer of discrepancy and use information in hard-copy Drawings and Specifications.

2. CAD files do not necessarily represent the latest Contract Documents, existing conditions, and as-built conditions. Receiver is responsible for determining and complying with these conditions and for incorporating addenda and modifications.

3. User is responsible for removing information not normally provided on Shop Drawings and removing references to Contract Documents. Shop Drawings submitted with information associated with other trades or with references to Contract Documents will not be reviewed and will be immediately returned.

4. Receiver shall not hold Engineer responsible for data or file clean-up required to make files usable, nor for error or malfunction in translation, interpretation, or use of this electronic information.

5. Receiver shall understand that even though Engineer has computer virus scanning software to detect the presence of computer viruses, there is no guarantee that computer viruses are not present in files or in electronic media.

6. Receiver shall not hold Engineer responsible for such viruses or their consequences, and shall hold Engineer harmless against costs, losses, or damage caused by the presence of computer virus in files or media.

1.6 SHOP DRAWINGS

A. Shop Drawings: Submit electronically to the Engineer in PDF format for assessing conformance with the information given and design concept expressed in the Contract Documents.

B. Indicate special utility and electrical characteristics, utility connection requirements, and location of utility outlets for service for functional equipment and appliances.

C. When required by individual Specification Sections, provide electronic Shop Drawings signed and sealed by a Professional Engineer licensed in the State of Florida responsible for designing components shown on Shop Drawings.

1. Include signed and sealed calculations to support design.

2. Submit Shop Drawings and calculations in form suitable for submission to and approval by authorities having jurisdiction.

3. Make revisions and provide additional information when required by authorities having jurisdiction.

D. After review, produce copies and distribute according to "Submittal Procedures" Article and for record documents described in Section 01 77 19, Execution and Closeout Requirements.

1.7 OTHER SUBMITTALS

A. Closeout Submittals: Comply with Section 01 77 19, Execution and Closeout Requirements.

B. Informational Submittal: Submit data for Engineer's knowledge as Contract administrator or for Owner.

C. Submit information for assessing conformance with the information given and design concept expressed in Contract Documents.

1.8 TEST REPORTS

A. Informational Submittal: Submit reports for Engineer's knowledge as the Contract administrator or for Owner. Submit one (1) electronic PDF copy to the Engineer.

B. Submit test reports for information for assessing conformance with the information given and design concept expressed in Contract Documents.

1.9 CERTIFICATES

A. Informational Submittal: Submit certification by manufacturer, installation/application Subcontractor, or Contractor to Engineer, in quantities specified for Product Data.

B. Indicate material or product conforms to or exceeds specified requirements. Submit supporting reference data, affidavits, and certifications as appropriate.

C. Certificates may be recent or previous test results on material or product, but must be acceptable to the Engineer.

1.10 PRECONSTRUCTION PHOTOGRAPHS AND VIDEOS

A. Provide Preconstruction Photographs and Videos in accordance with Section 01 32 33, Preconstruction Photographs and Videos.

1.11 CONSTRUCTION PHOTOGRAPHS

A. Provide photographs of the Site and construction throughout the progress of Work, produced by an experienced photographer acceptable to the Engineer.

B. Each month, submit photographs with the Application for Payment.

C. The quantity of photographs taken shall be sufficient to document the progress of the work.

D. Digital Images: Submit digital progress photographs to the Engineer as specified herein and with each Application for Payment.

1. Digital Images: Provide digital images in JPEG (JPG) format with a minimum resolution of 1600 by 1200 pixels. Images shall be clear, in focus, and adequately depict the status and condition of the Work.

2. Date and Time: Include date and time stamp in image metadata or identify the date photographs were taken within the file naming convention or accompanying photo log.

3. File Naming: Label image files with project name, location, or activity, and date photograph was taken.

1.12 CONTRACTOR REVIEW

A. Review for compliance with Contract Documents and approve submittals before transmitting to the Engineer.

B. Contractor shall be Responsible for:

1. Determination and verification of materials, including manufacturer's catalog numbers.

2. Determination and verification of field measurements and field construction criteria.

3. Checking and coordinating information in submittal with the requirements of Work and of Contract Documents.

4. Determination of accuracy and completeness of dimensions and quantities.

5. Confirmation and coordination of dimensions and field conditions at the Site.

6. Construction means, techniques, sequences, and procedures.

7. Safety precautions.

8. Coordination and performance of Work of all trades.

C. Stamp, sign or initial, and date each submittal to certify compliance with the requirements of the Contract Documents.

D. Do not fabricate products or begin Work for which submittals are required until approved submittals have been received from Engineer.

1.13 ENGINEER REVIEW

A. Do not make "mass submittals" to Engineer. "Mass submittals" are defined as six or more submittals or items in one day or 20 or more submittals or items in one week. If "mass submittals" are received, the Engineer's review time will be extended as necessary to perform proper review. Engineer will review "mass submittals" based on priority determined by Engineer after consultation with Owner and Contractor.

B. Informational submittals and other similar data are for Engineer's information, do not require Engineer's responsive action, and will not be reviewed or returned with comment.

C. Submittals made by Contractor that are not required by Contract Documents may be returned without action.

D. Submittal approval does not authorize changes to Contract requirements unless accompanied by Change Order.

E. Owner may withhold monies due to Contractor to cover additional costs beyond the second submittal review.

END OF SECTION

SECTION 01 45 23

TESTING AND INSPECTION SERVICES

PART 1 GENERAL

1.1 SUMMARY

A. Section Includes:

1. Testing and inspection services procedures and coordination

B. Related Specification Sections include, but are not necessarily limited to:

1. 01 33 00, Submittals
2. 01 60 00, Product Requirements
3. 01 66 00, Product Storage and Handling Requirements
4. 01 77 19, Closeout Requirements
5. 01 78 39, Project Record Documents

1.2 PRICE AND PAYMENT PROCEDURES

A. Measurement and Payment

1. Work associated with this Item is either included in the Bid Form or is considered subsidiary to the various Items bid. No separate payment will be allowed for this Item that is not explicitly included in the Bid Form.
2. Costs associated with testing and inspection services required by the Contract Documents shall be included in the Contract Price unless specifically identified as a separate Bid Item.
3. Contractor shall coordinate and pay for all testing, inspections, laboratory services, and retesting required to demonstrate compliance with Contract Documents.
4. Contractor shall provide access to the Work and cooperate with Owner, Engineer, and testing agencies.
5. Owner or Engineer may perform independent observations, inspections, or testing at their discretion. Such activities do not relieve Contractor of responsibility for compliance with Contract Documents.
6. Costs associated with failed tests, nonconforming Work, corrective actions, and retesting shall be borne by Contractor.

1.3 TOLERANCES

A. Monitor fabrication and installation tolerance control of products to produce acceptable Work. Do not permit tolerances to accumulate.

B. Comply with manufacturers' recommended tolerances and tolerance requirements in reference standards. When such tolerances conflict with Contract Documents, request clarification from Engineer before proceeding.

C. Adjust products to appropriate dimensions; position before securing products in place.

1.4 ADMINISTRATIVE REQUIREMENTS

A. Testing

1. Perform testing and inspections in accordance with the Contract Documents and applicable referenced standards.

2. Submit electronic copies of all testing and inspection reports to Engineer promptly upon completion of testing.

3. Clearly identify:

a. Project name

b. Date of testing

c. Location of work tested

d. Type of test performed

e. Test results

f. Testing agency name

4. Test reports indicating nonconforming or failed Work shall be immediately reported to Engineer.

5. Remove and replace Work that does not comply with Contract Documents at no additional cost to Owner.

6. Perform additional testing and retesting required due to failed tests, nonconforming Work, or corrective actions at Contractor’s expense.

1.5 REFERENCES

A. For products or workmanship specified by association, trade, or other consensus standards, comply with the requirements of the standard except when more rigid requirements are specified or are required by applicable codes.

B. Dating of reference standards may conflict with applicable building codes that reference standards with established dates. Therefore, individual SpecText Sections do not date reference standards, but rely on the first Paragraph below for applicable date of issue. Conversely, some products may be tested to specifically dated standards.

C. Conform to reference standard by date of issue, current as of date of Contract Documents, except where a specific date is established by code.

D. Obtain copies of standards and maintain on-site when required by product Specification Sections.

E. When requirements of indicated reference standards conflict with Contract Documents, request clarification from the Engineer before proceeding.

F. Neither contractual relationships, duties, or responsibilities of parties in Contract nor those of Engineer shall be altered from Contract Documents by mention or inference in reference documents.

PART 2 PRODUCTS (NOT USED)

PART 3 EXECUTION (NOT USED)

END OF SECTION

SECTION 01 50 00

TEMPORARY FACILITIES AND CONTROLS

PART 1 GENERAL

1.1 SUMMARY

A. Section Includes:

1. Provide temporary facilities and controls needed for the Work, including, but not necessarily limited to:
   a. Temporary utilities
   b. Sanitary facilities
   c. Storage Sheds and Buildings
   d. Dust control
   e. Temporary fencing of the construction site

B. Related Specification Sections include, but are not necessarily limited to:

1. 01 33 00, Special Project Procedures
2. 01 04 70, Modifications to Existing Structures, Piping, and Equipment
3. 01 10 00, Summary of Work
4. 01 32 16, Construction Progress Schedule
5. 01 53 00, Protection of Existing Facilities
6. 01 70 00, Mobilization and Remobilization
7. 01 74 23, Cleaning
8. 01 77 19, Closeout Requirements
9. 31 25 00, Erosion and Sedimentation Control

1.2 PRICE AND PAYMENT PROCEDURES

A. Measurement and Payment

1. Work associated with this Item is considered subsidiary to the various Items bid. No separate payment will be allowed for this Item.

1.3 ADMINISTRATIVE REQUIREMENTS

A. Temporary Utilities

1. Obtaining Temporary Service

   a. Make arrangements with utility service companies for temporary services.

   b. Abide by rules and regulations of utility service companies or authorities having jurisdiction.

   c. Be responsible for utility service costs until Work is approved for Final Acceptance.

      1) Included are fuel, power, light, heat and other utility services necessary for execution, completion, testing and initial operation of Work.

2. Water

   a. Contractor to provide water required for and in connection with Work to be performed and for specified tests of piping, equipment, devices, or other use as required for the completion of the Work.

   b. Provide and maintain adequate supply of potable water for domestic consumption by Contractor personnel and Owner's Representatives.

   c. Contractor Payment for Construction Water

      1) Contractor shall coordinate supply and pay for all water required for completion of the Work.

3. Electricity and Lighting

   a. Provide and pay for electric-powered service as required for Work, including testing of Work.

      1) Provide power for lighting, operation of equipment, or other use.

   b. Electric power service includes temporary power service or generator to maintain operations during scheduled shutdown.

4. Telephone

   a. Provide emergency telephone service at Site for use by Contractor personnel and others performing work or furnishing services at Site.

5. Temporary Heat and Ventilation

   a. Provide temporary heat as necessary for protection or completion of Work.

   b. Provide temporary heat and ventilation to assure safe working conditions.

B. Sanitary Facilities

1. Provide and maintain sanitary facilities for persons on Site.
    a. Comply with regulations of the State and local departments of health.
2. Enforce use of sanitary facilities by construction personnel at job site.
    a. Enclose and anchor sanitary facilities.
    b. No discharge will be allowed from these facilities.
    c. Collect and store sewage and waste so as not to cause nuisance or health problem.
    d. Haul sewage and waste off-site at no less than weekly intervals and properly dispose in accordance with applicable regulation.
3. Locate facilities near Work Site and keep clean and maintained throughout Project.
4. Remove facilities at completion of Project

C. Storage Sheds and Buildings

1. Provide adequately ventilated, watertight, weatherproof storage facilities with floor above ground level for materials and equipment susceptible to weather damage.
2. Storage of materials not susceptible to weather damage may be on blocks off ground.
3. Store materials in a neat and orderly manner.
    a. Place materials and equipment to permit easy access for identification, inspection and inventory.
4. Equip facility with lockable doors and lighting, and provide electrical service for equipment space heaters and heating or ventilation as necessary to provide storage environments acceptable to specified manufacturers.
5. Fill and grade site for temporary structures to provide drainage away from temporary and existing buildings.
6. Remove facility from site prior to Final Acceptance.

D. Temporary Fencing

1. Provide and maintain for the duration of construction when required in contract documents.

E. Dust Control

1. Contractor is responsible for maintaining dust control through the duration of the project.
    a. Contractor remains on-call at all times
    b. Must respond in a timely manner

F. Temporary Protection of Construction

1. Contractor or Subcontractors are responsible for protecting Work from damage due to weather.

1.4 INSTALLATION

A. Temporary Facilities

1. Maintain all temporary facilities for duration of construction activities as needed.

1.5 CLOSEOUT ACTIVITIES

A. Temporary Facilities

1. Remove all temporary facilities and restore area after completion of the Work, to a condition equal to or better than prior to start of Work.

END OF SECTION

SECTION 01 53 00

PROTECTION OF EXISTING FACILITIES

PART 1 GENERAL

1.1 GENERAL

A. The Contractor shall protect all existing facilities, including all utilities and improvements not designated for removal, and shall restore damaged or temporarily relocated utilities and improvements to a condition equal to or better than prior to such damage or temporary relocation, all in accordance with the Contract Documents.

1.2 EXISTING UTILITIES AND IMPROVEMENTS

A. General: The Contractor shall protect both aboveground and underground utilities and other improvements which may be impaired during construction operations, regardless of whether or not the utilities are indicated on the Drawings. The Contractor shall take all possible precautions for the protection of unforeseen utility lines to provide for uninterrupted service and to provide such special protection as may be necessary.

B. Except where the Drawings indicate utilities have been field located during design or certain utility locations shall be exposed as part of the Work, the Contractor shall be responsible for exploratory excavations as it deems necessary to determine the exact locations and depths of utilities which may interfere with its work. All such exploratory excavations shall be performed as soon as practicable after Notice to Proceed and, in any event, a sufficient time in advance of construction to avoid possible delays to the Contractor's progress. When such exploratory excavations show the utility location as shown on the Drawings to be in error, the Contractor shall so notify the Engineer.

C. The number of exploratory excavations required shall be that number which is sufficient to determine the alignment and grade of the utility.

D. Utilities to be Moved: In case it shall be necessary to move the property of any public utility or franchise holder, such utility company or franchise holder will, upon request of the Contractor, be notified by the Owner to move such property within a specified reasonable time. When utility lines that are to be removed are encountered within the area of operations, the Contractor shall notify the Engineer a sufficient time in advance for the necessary measures to be taken to prevent interruption of service.

E. Utilities to be Removed: Where the proper completion of the Work requires the temporary or permanent removal and/or relocation of an existing utility or other improvement which is indicated, the Contractor shall remove and, without unnecessary delay, temporarily replace or relocate such utility or improvement in a manner satisfactory to the Engineer and the Owner of the facility. In all cases of such temporary removal or relocation, restoration to the former location shall be accomplished by the Contractor in a manner that will restore or replace the utility or improvement as nearly as possible to its former locations and to as good or better condition than found prior to removal.

F. Owner's Right of Access: The right is reserved to the Owner and to the owners of public utilities and franchises to enter at any time upon any public street, alley, right- of-way, or easement for the purpose of making changes in their property made necessary by the Work of this Contract.

G. Underground Utilities Indicated: Existing utility lines that are indicated or the locations of which are made known to the Contractor prior to excavation and that are to be retained, and all utility lines that are constructed during excavation operations shall be protected from damage during excavation and backfilling and, if damaged, shall be immediately repaired or replaced by the Contractor, unless otherwise repaired by the owner of the damaged utility. If the owner of the damaged facility performs its own repairs, the Contractor shall reimburse said owner for the costs of repair.

H. Underground Utilities Not Indicated: In the event that the Contractor damages existing utility lines that are not indicated or the locations of which are not made known to the Contractor prior to excavation, a verbal report of such damage shall be made immediately to the Engineer, and a written report thereof shall be made promptly thereafter. The Engineer will immediately notify the owner of the damaged utility. If the Engineer is not immediately available, the Contractor shall notify the utility owner of the damage. If directed by the Engineer, repairs shall be made by the Contractor under the provisions for changes and extra work contained in Articles 10, 11, and 12 of the General Conditions.

I. Costs of locating and repairing damage not due to failure of the Contractor to exercise reasonable care, and removing or relocating such utility facilities not indicated in the Contract Documents with reasonable accuracy, and for equipment on the project which was actually working on that portion of the Work which was interrupted or idled by removal or relocation of such utility facilities, and which was necessarily idled during such Work will be paid for as extra Work in accordance with the Contract Documents.

J. Approval of Repairs: All repairs to a damaged utility or improvement are subject to inspection and approval by an authorized representative of the utility or improvement owner before being concealed by backfill or other Work.

K. Maintaining in Service: Unless indicated otherwise, oil and gasoline pipelines, power, and telephone or the communication cable ducts, gas and water mains, irrigation lines, sewer lines, storm drain lines, poles, and overhead power and communication wires and cables encountered along the line of the Work shall remain continuously in service during all the operations under the Contract, unless other arrangements satisfactory to the Engineer are made with the owner of said pipelines,duct, main, irrigation line, sewer, storm drain, pole, or wire or cable. The Contractor shall be responsible for and shall repair all damage due to its operations, and the provisions of this Section shall not be abated even in the event such damage occurs after backfilling or is not discovered until after completion of the backfilling.

1.3 LAWN AREAS

A. Lawn or landscaped areas damaged during construction shall be repaired to match the pre- construction condition to the satisfaction of the landowner and the Owner.

1.4 NOTIFICATION BY THE CONTRACTOR

A. The Contractor must contact “Sunshine State One Call” at (800) 432-4770 a minimum of 48 business hours prior to excavation. The Contractor shall provide the Sunshine State One Call verification number for the project to the Owner.

END OF SECTION

SECTION 01 60 00

PRODUCT REQUIREMENTS

PART 1 GENERAL

1.1 SECTION INCLUDES

A. Products.

B. Product options.

C. Equipment electrical characteristics and components.

1.2 PRODUCTS

A. At minimum, comply with specified requirements in the Contract Documents and reference standards.

B. Specified products define the standard of quality, type, function, dimension, appearance, and performance required.

C. Furnish products of qualified manufacturers that are suitable for intended use. Furnish products of each type by single manufacturer unless specified otherwise. Confirm that manufacturer's production capacity can provide sufficient product, on time, to meet Project requirements.

D. Do not use materials and equipment removed from existing premises except as specifically permitted by Contract Documents.

E. Furnish interchangeable components from same manufacturer for components being replaced.

1.3 DELIVERY, STORAGE, AND HANDLING REQUIREMENTS

A. Deliver, store, and handle products in accordance with Section 01 66 00, Product Delivery, Storage, and Handling Requirements

1.4 PRODUCT OPTIONS

A. Products Specified by Reference Standards or by Description Only: Products complying with specified reference standards or description.

B. Products Specified by Naming One or More Manufacturers: Products of one of manufacturers named and complying with Specifications; no options or substitutions allowed.

PART 2 PRODUCTS

2.1 EQUIPMENT ELECTRICAL CHARACTERISTICS AND COMPONENTS

A. Wiring Terminations: Furnish terminal lugs to match branch circuit conductor quantities, sizes, and materials indicated. Include lugs for the terminal box.

B. Cord and Plug: Furnish a minimum 6-foot-long cord and plug, including a grounding connector for connection to the electric wiring system. A cord of longer length may be specified in individual Specification Sections.

END OF SECTION

SECTION 01 61 00

OWNER FURNISHED EQUIPMENT

PART 1 GENERAL

1.1 SCOPE OF WORK

A. The Owner has separately procured or will separately procure equipment to be incorporated into the Work. The Contractor shall receive, unload, store, protect, install, connect, test, and place into operation the Owner-Furnished Equipment (OFE) as indicated in the Contract Documents.

B. The Contractor shall install, complete, and make operable the Owner-furnished equipment (OFE), all in accordance with the Requirements of the Contract Documents.

1. The Filter System Supplier will provide technical assistance and startup support as specified herein. Contractor remains responsible for installation, coordination, and providing a complete operable system. More specifically, the Contractor is responsible for the following:

a. Unloading the Filter System when delivered to the project site concurrent with the work proposed in these Contract Documents.

b. Furnishing and installing materials to anchor the Filter System to the Reinforced Cast-In-Place Concrete Pad to be installed by the Contractor.

c. Washing and media loading for the Filter System tanks, with Filter System Supplier assistance.

d. Providing connections to the Filter System and the Water Treatment Plant Yard Piping to be installed by the Contractor.

1.2 DELIVERY, UNLOADING, AND ACCEPTANCE

A. The OFE will be delivered to the project site.

B. The Contractor shall be responsible unloading of the OFE at the project site, storage of the OFE until the time of installation, and installing the OFE according to the Contract Documents. The Contractor shall coordinate with the Owner in scheduling the retrieval of the OFE.

C. At the time of receipt, the Contractor, along with the Owner and / or the Engineer, shall visually inspect the OFE and note in writing any apparent defects or deficiencies. Both the Owner and / or the Engineer and Contractor shall sign a form indicating the type and number of the OFE provided to the Contractor, the date and time of acceptance, any visual defects observed, and the names and signatures of all individuals inspecting and providing/receiving the materials.

D. The Contractor shall assume responsibility for custody, protection, handling, storage, and installation of OFE following acceptance at the Project site, and securing the equipment to prevent damage or theft. The handling and storage of the OFE shall fully conform to appropriate manufacturer recommendations.

E. The Contractor shall protect and maintain the OFE in a manner that will prevent damage in accordance with the manufacturer's instructions and recommendations until final acceptance of the Work.

F. Any and all OFE equipment which suffers damage, deterioration, or corrosion, after the Contractor's acceptance, shall be replaced by the Contractor or repaired to the satisfaction of the Engineer at the Contractor's expense. Any OFE that is lost by the Contractor shall be replaced in kind at the Contractor's expense.

1.3 SUBMITTALS

A. Shop Drawings: Copies of the final shop drawings, including installation instructions, will be made available to the Contractor by the Supplier for the Contractor's use in performing the Work under this section.

B. Operations and Maintenance Manuals: Operations and Maintenance Manuals will be made available to the Contractor by the Supplier for the Contractor's use in performing the Work under this section.

1.4 QUALITY ASSURANCE

A. Field Tests: All completed units shall be field tested after installation to demonstrate satisfactory operations. The Contractor shall coordinate with the equipment supplier to review the installation and complete field testing. The Contractor shall notify the Owner that equipment is ready for testing a minimum of 10 days prior to testing.

1.5 INSURANCE

A. The Contractor shall include in his insurance coverage for the Work under this Contract, sufficient coverage to protect the OFE and materials against all losses during unloading, storage, and installation until final acceptance of the Work by the Owner and Engineer.

PART 2 PRODUCTS

2.1 EQUIPMENT ITEMS FURNISHED BY THE OWNER

A. Except for equipment specifically identified as OFE, all other materials required to complete the Work shall be provided by the Contractor. Such materials to be provided by the Contractor include, but are not limited to all connecting piping, pumps, valves, fittings, flanges, pipe joint restraints, bolts, nuts, gaskets, hangers, stainless steel straps, pipe supports, hoses, sheet metal, anchors, additional hardware, conduit, power, control and instrumentation wiring, miscellaneous appurtenances and accessories, prime and finish painting, cement and stucco, expendable materials, and lubricants, all as necessary to provide complete and properly functioning systems.

B. All materials provided by the Contractor are subject to approval by the Engineer prior to their installation into the Work. The Contractor shall provide submittals for all materials and components it proposes to furnish along with such data as necessary to allow the Engineer to determine their fitness for the Work.

C. Items to be furnished by Owner through direct purchase:

1. Filter System and Appurtenances

PART 3 EXECUTION

3.1 INSTALLATION

A. General: ALL OFE shall be installed in accordance with the manufacturer's / supplier's instructions and documentation provided by the Contractor and as indicated on the Drawings and specified in the Specifications, unless otherwise approved in writing by the Engineer.

B. Responsibility for Complete System: The Contractor shall assume complete responsibility for the necessary storing, installing, adjusting, and lubricating of the OFE under this section. The Contractor shall be fully responsible for coordinating the construction of interconnecting equipment, piping, and appurtenances to effect installation and operation of the equipment.

C. Except for equipment specifically identified as OFE, all other materials required to complete the Work shall be furnished by the Contractor to provide a complete operable system.

D. The Contractor shall provide all supervision, labor, tools, construction equipment, incidental materials, and the necessary service to complete the installation and testing of OFE.

E. Mechanical, electrical, and all other work required to install the OFE shall conform to the Contract Document requirements, applicable standards, and approved shop drawings.

3.2 PROTECTIVE COATING

A. All exposed materials, except corrosion-resistant materials which have not been shop-painted, shall be field coated, if required by the Manufacturer's / Supplier's instructions or recommendations. Shop-painted items that suffered damage to the shop coating shall be touched up as approved by the Engineer.

3.3 CERTIFICATE OF PROPER INSTALLATION

A. Following the successful performance testing and acceptance of the Work, the authorized representative of the manufacturer of OFE shall provide the Owner and the Contractor with a written certificate of proper installation. Such certification shall indicate the date of test, testing performed, statement of conformance to proper installation, and statement of meeting the performance requirements.

END OF SECTION

SECTION 01 66 00

PRODUCT DELIVERY, STORAGE, AND HANDLING REQUIREMENTS

PART 1 GENERAL

1.1 SCOPE OF WORK

A. This Section specifies the general requirements for the delivery, handling, storage, and protection of all items required in the construction of the Work. Specific requirements, if any, are specified with the related item.

B. Related Specification Sections include, but are not necessarily limited to:

1. Division 01, Standard General Conditions
2. 01 33 00, Submittals
3. 01 55 00, Temporary Facilities and Control
4. 01 53 00, Protection of Existing Facilities
5. 01 66 00, Product Requirements
6. 01 77 19, Closeout Requirements

1.2 PRICE AND PAYMENT PROCEDURES

A. Measurement and Payment

1. Work associated with this Item is considered subsidiary to the various Items bid. No separate payment will be allowed for this Item.

1.3 DELIVERY, STORAGE, AND HANDLING

A. Delivery Requirements

1. Schedule delivery of products or equipment as required to allow timely installation and to avoid prolonged storage.
2. Provide necessary equipment and personnel to unload all items delivered to the site.
3. Delivery trucks will not be permitted to wait extended periods of time on the Site for personnel or equipment to receive the delivery.
4. Deliver products or equipment in manufacturer's original unbroken cartons or other containers designed and constructed to protect the contents from physical or environmental damage.
5. Clearly and fully mark and identify as to manufacturer, item, and installation location.
6. Provide manufacturer's instructions for storage and handling.
7. Material and equipment shall be delivered to the job site by means that will adequately support it and not subject it to undue stresses. Material and equipment damaged or injured in the process of transportation unloading or handling shall be rejected and immediately removed from the site.

8. Material and equipment shall be delivered to the job site by means that will adequately support it and not subject it to undue stresses. Material and equipment damaged or injured in the process of transportation unloading or handling shall be rejected and immediately removed from the site.
9. The Contractor shall coordinate the delivery of all materials. The Contractor shall be responsible for the proper transport, handling, and storing of all materials, and materials shall be protected to ensure their expected performance. Delivery schedules shall be coordinated by the Contractor, in advance, so that the Work will be done in a timely manner.
10. The Contractor shall coordinate deliveries of products with construction schedules to avoid conflict with work and conditions at the site. The Contractor shall also do the following:
    a. Deliver products in undamaged condition, in the manufacturer's original containers or packaging, with identifying labels intact and legible.
    b. Immediately on delivery, inspect shipments to ensure compliance with requirements of the Contract Documents and approved submittals and to ensure that the products are properly protected and undamaged.
11. Schedule delivery to reduce long-term onsite storage before installation and/or operation. Under no circumstances shall equipment be delivered to the site more than 1 month before installation without written authorization from the Engineer.
12. Coordinate delivery with installation to ensure minimum holding time for items that are hazardous, flammable, easily damaged, or sensitive to deterioration.

B. Handling Requirements

1. Handle products or equipment in accordance with these Contract Documents and manufacturer’s recommendations and instructions.
2. Materials and equipment shall be loaded and unloaded by methods affording adequate protection against damage. Every precaution shall be taken to prevent injury to the material or equipment during transportation and handling. Suitable power equipment shall be used and the material or equipment shall be under control at all times. Under no condition shall the material or equipment be dropped, bumped, or dragged. When a crane is used, a suitable hook or lift sling shall be used. The crane shall be so placed that all lifting is done in a vertical plane. Materials or equipment skid loaded, palletized, or handled on skidways shall not be skidded or rolled against material or equipment already unloaded.
3. The Contractor shall provide equipment and personnel to handle products by methods to prevent soiling or damage to products or packaging.

C. Storage Requirements

1. Store materials in accordance with the manufacturer's recommendations and requirements of these Specifications.
2. Make necessary provisions for safe storage of materials and equipment.
   a. Place loose soil materials and materials to be incorporated into Work to prevent damage to any part of Work or existing facilities and to maintain free access at all times to all parts of Work and to utility service company installations in the vicinity of Work.
3. Keep materials and equipment neatly and compactly stored in locations that will cause minimum inconvenience to other contractors, public travel, adjoining owners, tenants, and occupants.
   a. Arrange storage to provide easy access for inspection.
4. Restrict storage to areas available on the construction site for storage of material and equipment as shown on Drawings or approved by the Engineer.
5. Provide off-site storage and protection when on-site storage is not adequate.
   a. Provide addresses of and access to off-site storage locations for inspection by the Engineer.
6. Do not use lawns, grass plots, or other private property for storage purposes without written permission of property owner or other person in possession or control of premises.
7. Store in manufacturers' unopened containers.
8. Neatly, safely, and compactly stack materials delivered and stored along the line of Work to avoid inconvenience and damage to property owners and the general public and maintain at least 3 feet from fire hydrants.
9. Keep public and private driveways and street crossings open.
10. Repair or replace damaged lawns, sidewalks, streets, or other improvements to satisfaction of Engineer.
    a. Total length which materials may be distributed along route of construction at one time is 1,000 linear feet, unless otherwise approved in writing by the Engineer.
11. Store products subject to damage by the elements in weather-tight enclosures.
12. Maintain temperature and humidity within the ranges required by the manufacturer's instructions.
13. Store fabricated products above the ground, on blocking or skids to prevent soiling or staining. Cover products that are subject to deterioration with impervious sheet coverings and provide adequate ventilation to avoid condensation.
14. All materials and equipment to be incorporated in the Work shall be handled and stored by the Contractor before, during, and after shipment in a manner that will prevent warping, twisting, bending, breaking, chipping, rusting, and any injury, theft, or damage of any kind to the material or equipment.

15. The Contractor shall arrange storage in a manner to provide easy access for inspection and make periodic inspections of stored products to ensure that products are maintained under specified conditions, free from damage or deterioration.
16. The Contractor shall provide substantial coverings as necessary to protect installed products from traffic damage and subsequent construction operations and shall remove these coverings when they are no longer needed.
17. Store cement and lime under a roof and off the ground, and keep it completely dry at all times. All structural, miscellaneous, and reinforcing steel shall be stored off the ground or otherwise to prevent accumulations of dirt or grease and in a position to prevent accumulations of standing water and to minimize rusting. Beams shall be stored with the webs vertical. Precast concrete shall be handled and stored in a manner to prevent accumulations of dirt, standing water, staining, chipping, or cracking. Handle and store brick, block, and similar masonry products in a manner to keep breaking, cracking, and spilling to a minimum.

1.4 FIELD QUALITY CONTROL

A. Tests and Inspections

1. Inspect all products or equipment delivered to the site prior to unloading.

B. Non-Conforming Work

1. Reject all products or equipment that are damaged, used or in any other way unsatisfactory for use on the project.

C. All materials which, in the opinion of the Engineer, have become so damaged as to be unfit for the use intended or specified shall be promptly removed from the site of the Work, and the Contractor shall receive no compensation for the damaged material or its removal.

D. Should the Contractor fail to take proper action on storage and handling of equipment supplied under this Contract, within 7 days after written notice to do so has been given, the Owner retains the right to correct all deficiencies noted in the previously transmitted written notice and deduct the cost associated with these corrections from the Contractor’s Contract. These costs may include expenditures for labor, equipment use, administrative, clerical, engineering, and any other costs associated with making the necessary corrections.

1.5 PROTECTION

A. Protect all products or equipment in accordance with the manufacturer's written directions.

B. Store products or equipment in a location to avoid physical damage to items while in storage.

C. Protect equipment from exposure to elements and keep it thoroughly dry if required by the manufacturer.

END OF SECTION

SECTION 01 70 00

MOBILIZATION AND DEMOBILIZATION

PART 1 GENERAL

1.1 MOBILIZATION AND DEMOBILIZATION

A. Mobilization

1. Transportation of Contractor's personnel, equipment, and operating supplies to the Site
2. Establishment of necessary general facilities for the Contractor's operation at the Site
3. Premiums paid for performance and payment bonds.
4. Transportation of Contractor's personnel, equipment, and operating supplies to another location within the designated Site
5. Relocation of necessary general facilities for the Contractor's operation from one location to another location on the Site.

B. Demobilization

1. Transportation of Contractor's personnel, equipment, and operating supplies away from the Site including disassembly
2. Site Clean-up
3. Removal of all buildings and/or other facilities assembled at the Site for this Contract.
4. Mobilization and Demobilization do not include activities for specific items of work that are for which payment is provided elsewhere in the contract.

PART 2 PRICE AND PAYMENT PROCEDURES

2.1 MEASUREMENT AND PAYMENT

A. Measurement

1. This Item will be measured by the lump sum. Mobilization is calculated on the base bid only and will not be paid for separately for any additive alternate items added to the Contract.

B. Payment

1. For this Item, the adjusted Contract amount will be calculated as the total Contract amount less the lump sum for mobilization. Mobilization shall be made in partial payments as follows:
2. When 1% of the adjusted Contract amount for construction Items is earned, 50% of the mobilization lump sum bid or 2.5% of the total Contract amount, whichever is less, will be paid.
3. When 5% of the adjusted Contract amount for construction Items is earned, 75% of the mobilization lump sum bid or 3.75% of the total Contract amount, whichever is less, will be paid. Previous payments under the Item will be deducted from this amount.
4. When 10% of the adjusted Contract amount for construction Items is earned, 100% of the mobilization lump sum bid or 5.0% of the total Contract amount, whichever is less, will be paid. Previous payments under the Item will be deducted from this amount.
5. The work performed and materials furnished for demobilization in accordance with this Item are subsidiary to the various Items bid and no other compensation will be allowed.

END OF SECTION

SECTION 01 71 23

CONSTRUCTION LAYOUT AND RECORD SURVEY

PART 1 GENERAL

1.1 SUMMARY

A. Section Includes:

1. Requirements for construction staking and construction survey

B. Related Specification Sections include, but are not necessarily limited to:

1. Division 00 – Contracting Requirements
2. Division 01 – General Requirements

1.2 PRICE AND PAYMENT PROCEDURES

A. Measurement and Payment

1. Work associated with this Item is considered subsidiary to the various Items bid. No separate payment will be allowed for this Item.

1.3 REFERENCES

A. Definitions

1. Construction Survey - The survey measurements made prior to or while construction is in progress to control elevation, horizontal position, dimensions and configuration of structures/improvements included in the Project Drawings.
2. Record Survey –The measurements made after the construction of the improvement features are complete to provide position coordinates for the features of a project.
3. Construction Staking and Layout – The placement of stakes and markings to provide offsets and elevations to cut and fill in order to locate on the ground the designed structures/improvements included in the Project Drawings. Construction staking shall include staking easements and/or right of way if indicated on the plans.
4. Survey "Field Checks" – Measurements made after construction staking is completed and before construction work begins to ensure that structures marked on the ground are accurately located per Project Drawings.

1.4 ADMINISTRATIVE REQUIREMENTS

A. Surveyor shall be a Licensed Professional Surveyor in the State of Florida.

1.5 SUBMITTALS

A. Submittals shall be in accordance with Section 01 33 00.

B. All submittals shall be received and reviewed by the Engineer prior to delivery of work.

1.6 ACTION SUBMITTALS/INFORMATIONAL SUBMITTALS

A. Field Quality Control Submittals

1. Documentation verifying the accuracy of field engineering work, including coordinate conversions if plans do not indicate grid or ground coordinates.

1.7 CLOSEOUT SUBMITTALS

A. Closeout submittals shall be in accordance with Section 01 77 19, Closeout Requirements.

1.8 QUALITY ASSURANCE

A. Construction Staking and Layout

1. Construction staking and layout will be performed by the Contractor.
2. Coordination
   a. Notify the Engineer at least one week in advance of beginning Construction Staking.
   b. It is the Contractor's responsibility to coordinate staking such that construction activities are not delayed or negatively impacted.
3. Contractor is responsible for preserving and maintaining stakes and existing benchmarks. The Contractor shall restore any damaged benchmark at no cost to the Owner.

B. Construction Survey

1. Construction Survey will be performed by the Contractor.
2. General
   a. Construction survey will be performed in order to construct the work shown on the Drawings and specified in the Contract Documents.
   b. For construction methods other than open cut, the Contractor shall perform construction survey and verify control data including, but not limited to, the following:
      1) Verification that established benchmarks and controls are accurate.
      2) Use of Benchmarks to furnish and maintain all reference lines and grades for tunneling.
      3) Use of line and grades to establish the location of the pipe.
      4) Submit to the Engineer copies of field notes used to establish all lines and grades, if requested, and allow the Engineer to check guidance system setup prior to beginning each tunneling drive.
      5) Provide access for the Engineer, if requested, to verify the guidance system and the line and grade of the carrier pipe.
      6) The Contractor remains fully responsible for the accuracy of the work and correction of it, as required.
      7) Monitor line and grade continuously during construction.
      8) Record deviation with respect to design line and grade once at each pipe joint and submit daily records to the Engineer.
      9) If the installation does not meet the specified tolerances, immediately notify the Engineer and correct the installation in accordance with the Contract Documents.

C. Record Survey

1. Record Survey will be performed by a Licensed Surveyor or Professional Engineer, in accordance with Section 01 78 39, Project Record Documents.
2. Coordination:
   a. It is the Contractor's responsibility to coordinate the Record Survey and required measurements for items that are to be buried such that construction activities are not delayed or negatively impacted.
3. General
   a. The Contractor shall provide as-built survey including the elevation and location of construction features including the following:
      1) Water Lines
         a) Top of pipe elevations and coordinates for waterlines at the following locations:
      2) Minimum every 50 linear feet.
      3) Horizontal and vertical points of inflection, curvature, etc.
      4) Blowoff valves.
      5) Air Release valves.
      6) Pipe tees.
      7) Valves.
      8) Plugs, stub-outs, dead-end lines.
      9) Casing pipe (each end) and all buried fittings.
         a) Locations of all exposed existing utilities and features adjacent to or crossing the Work.
         b) Other features as directed by the Engineer.

PART 2 PRODUCTS

2.1 GENERAL

A. Construction survey will produce, but will not be limited to:

1. Recovery of relevant control points, points of curvature and points of intersection.
2. Establish temporary horizontal and vertical control elevations (benchmarks) sufficiently permanent and located in a manner to be used throughout construction.
3. The location of planned facilities, easements, and improvements.
   a. Establishing final line and grade stakes for piers, floors, grade beams, parking areas, utilities, streets, highways, tunnels, and other construction.
   b. A record of revisions or corrections noted in an orderly manner for reference.
   c. A drawing, when required by the Engineer, indicating the horizontal and vertical location of facilities, easements, and improvements, as built.
4. Digital Record Survey files shall be submitted to the Engineer in AutoCAD (.dwg) format in accordance with Section 01 78 39, Project Record Documents
5. Survey files shall include vertical and horizontal data tied to original project control and benchmarks, and shall include feature descriptions.

PART 3 EXECUTION

3.1 INSTALLERS

A. Tolerances:

1. The staked location of any improvement or facility should be as accurate as practical and necessary. The degree of precision required is dependent on many factors all of which must remain judgmental. The tolerances listed hereafter are based on generalities and, under certain circumstances, shall yield to specific requirements. The surveyor shall assess any situation by review of the overall plans and through consultation with responsible parties as to the need for specific tolerances.

   a. Earthwork: Grades for earthwork or rough cut should not exceed 0.1 ft. vertical tolerance. Horizontal alignment for earthwork and rough cut should not exceed 1.0 ft. tolerance.

   b. Horizontal alignment on a structure shall be within .0.1ft tolerance.

   c. Paving or concrete for streets, curbs, gutters, parking areas, drives, alleys and walkways shall be located within the confines of the site boundaries and, occasionally, along a boundary or any other restrictive line. Away from any restrictive line, these facilities should be staked with an accuracy producing no more than 0.05ft. tolerance from their specified locations.

   d. Underground and overhead utilities, such as sewers, gas, water, telephone and electric lines, shall be located horizontally within their prescribed areas or easements. Within assigned areas, these utilities should be staked with an accuracy producing no more than 0.1 ft tolerance, horizontally and vertically, from a specified location.

B. Surveying instruments shall be kept in close adjustment according to manufacturer's specifications or in compliance to standards. The Engineer reserves the right to request a calibration report at any time and recommends regular maintenance schedule be performed by a certified technician every 6 months.

1. Field measurements of angles and distances shall be done in such fashion as to satisfy the closures and tolerances expressed in Part 3.1.A.
2. Vertical locations shall be established from a pre-established benchmark and checked by closing to a different bench mark on the same datum.
3. Construction survey field work shall correspond to the Drawings. Irregularities or conflicts found shall be reported promptly to the Engineer.
4. Revisions, corrections and other pertinent data shall be logged for future reference.

3.2 REPAIR / RESTORATION

A. If the Contractor's work damages or destroys one or more of the control monuments/points set by the Owner, the monuments shall be immediately replaced by the Contractor.

3.3 FIELD QUALITY CONTROL

A. It is the Contractor's responsibility to maintain all stakes and control data placed by the Owner in accordance with this Specification. This includes easements and right of way, if noted on the plans.

B. Do not change or relocate stakes or control data without approval from the Engineer.

3.4 SYSTEM STARTUP

A. Survey Checks

1. The Owner reserves the right to perform a Survey Check at any time deemed necessary.
2. Checks by Owner personnel or 3rd party contracted surveyor are not intended to relieve the contractor of his/her responsibility for accuracy.

END OF SECTION

SECTION 01 74 23

CLEANING

PART 1 GENERAL

1.1 SUMMARY

A. Section Includes:

1. Intermediate and final cleaning for Work not including special cleaning of closed systems specified elsewhere.

B. Related Specification Sections include, but are not necessarily limited to:

1. 01 00 00, General Conditions
2. 01 50 00, Temporary Facilities and Controls
3. 01 53 00, Protection of Existing Facilities
4. 01 77 19, Closeout Requirements
5. 09 90 00, Paintings and Coatings
6. 31 25 00, Erosion and Sedimentation Control
7. 33 05 10, Utility Trench Excavation, Embedding, and Backfill
8. 32 90 00, Seeding and Sodding

1.2 PRICE AND PAYMENT PROCEDURES

A. Measurement and Payment

1. Work associated with this Item is considered subsidiary to the various Items bid. No separate payment will be allowed for this Item.

1.3 ADMINISTRATIVE REQUIREMENTS

A. Scheduling

1. Schedule cleaning operations so that dust and other contaminants disturbed by the cleaning process will not fall on newly painted surfaces.
2. Schedule final cleaning upon completion of Work and immediately prior to final inspection.

1.4 STORAGE, AND HANDLING

A. Storage and Handling Requirements

1. Store cleaning products and cleaning wastes in containers specifically designed for those materials.

PART 2 PRODUCTS

2.1 MATERIALS

A. Cleaning Agents

1. Compatible with the surface being cleaned
2. New and uncontaminated
3. For manufactured surfaces
   a. Material recommended by manufacturer

PART 3 EXECUTION

3.1 CLEANING

A. General

1. Prevent the accumulation of wastes that create hazardous conditions.
2. Conduct cleaning and disposal operations to comply with laws and safety orders of governing authorities.
3. Do not dispose of volatile wastes such as mineral spirits, oil, or paint thinner in storm or sanitary drains or sewers.
4. Dispose of degradable debris at an approved solid waste disposal site.
5. Dispose of nondegradable debris at an approved solid waste disposal site or in an alternate manner approved by Owner and regulatory agencies.
6. Handle materials in a controlled manner with as few handlings as possible.
7. Thoroughly clean, sweep, wash, and polish all Work and equipment associated with this project.
8. Remove all signs of temporary construction and activities incidental to the construction of required permanent Work.
9. If the project is not cleaned to the satisfaction of the Owner, the Owner reserves the right to have the cleaning completed at the expense of the Contractor.
10. Do not burn on-site.

B. Intermediate Cleaning during Construction

1. Keep Work areas clean so as not to hinder the health, safety, or convenience of personnel in existing facility operations.
2. At maximum weekly intervals, dispose of waste materials, debris, and rubbish.
3. Confine construction debris daily in strategically located container(s):
   a. Cover to prevent blowing by wind.
   b. Store debris away from construction or operational activities.
   c. Haul from the site at a minimum of once per week.

4. Vacuum clean interior areas when ready to receive finish painting.
    a. Continue vacuum cleaning on an as-needed basis until Final Acceptance.
5. Prior to storm events, thoroughly clean the site of all loose or unsecured items, which may become airborne or transported by flowing water during the storm.

C. Interior Final Cleaning

1. Remove grease, mastic, adhesives, dust, dirt, stains, fingerprints, labels, and other foreign materials from sight-exposed surfaces.
2. Wipe all lighting fixture reflectors, lenses, lamps, and trims clean.
3. Wash and shine glazing and mirrors.
4. Polish glossy surfaces to a clear shine.
5. Ventilating systems
    a. Clean permanent filters and replace disposable filters if units were operated during construction.
    b. Clean ducts, blowers and coils if units were operated without filters during construction.
6. Replace all burned out lamps.
7. Broom clean process area floors.
8. Mop office and control room floors.

D. Exterior (Site or Right of Way) Final Cleaning

1. Remove trash and debris containers from the site.
    a. Re-seed areas disturbed by the location of trash and debris containers in accordance with Section 32 92 00, Seeding and Sodding.
2. Sweep roadway to remove all rocks, pieces of asphalt, concrete, or any other object that may hinder or disrupt the flow of traffic along the roadway.
3. Clean any interior areas, including, but not limited to, vaults, manholes, structures, junction boxes, and inlets.
4. If no longer required for maintenance of erosion facilities, and upon approval by the Engineer, remove erosion control from the site.
5. Clean signs, lights, signals, etc.

END OF SECTION

SECTION 01 77 19

CLOSEOUT REQUIREMENTS

PART 1 GENERAL

1.1 SUMMARY

A. Section Includes:

1. The procedure for closing out a contract.

B. Related Specification Sections include, but are not necessarily limited to:

1. 01 00 00, General Requirements
2. 01 33 00, Submittal Procedures
3. 01 78 39, Project Record Documents

1.2 PRICE AND PAYMENT PROCEDURES

A. Measurement and Payment

1. Work associated with this Item is considered subsidiary to the various Items bid. No separate payment will be allowed for this Item.

1.3 ADMINISTRATIVE REQUIREMENTS

A. Guarantees, Bonds, and Affidavits

1. No application for final payment will be accepted until all guarantees, bonds, certificates, licenses, and affidavits required for Work or equipment as specified are satisfactorily filed with the Owner and Engineer.

B. Release of Liens or Claims

1. No application for final payment will be accepted until satisfactory evidence of release of liens has been submitted to the Owner and Engineer.

1.4 SUBMITTALS

A. Submit all required documentation in accordance with Section 01 33 00, Submittals.

PART 2 EXECUTION

2.1 CLOSEOUT PROCEDURE

A. Prior to requesting Final Inspection, submit:

1. Project Record Documents in accordance with Section 01 78 39, Project Record Documents.

B. Prior to requesting Final Inspection, perform final cleaning in accordance with Section 01 74 23.

C. Final Inspection

1. After final cleaning, provide notice to the Engineer that the Work is completed.

   a. The Engineer will make an initial Final Inspection with the Contractor present.

   b. Upon completion of this inspection, the Engineer will notify the Contractor, in writing, within 10 business days, of any particulars in which this inspection reveals that the Work is defective or incomplete.

2. Upon receiving written notice from the Engineer, immediately undertake the Work required to remedy deficiencies and complete the Work to the satisfaction of the Engineer.

3. Upon completion of the Work associated with the items listed in the Engineer's written notice, inform the Engineer that the required Work has been completed. Upon receipt of this notice, the Engineer, in the presence of the Contractor, will make a subsequent Final Inspection of the project.

D. Notice of Project Completion

1. Once the Engineer finds the Work subsequent to Final Inspection, to be satisfactory, the Engineer will issue a Notice of Project Completion.

E. Supporting Documentation

1. Coordinate with the Engineer to complete the following additional forms:

   a. Final Payment Request

   b. Statement of Contract Time

   c. Affidavit of Payment and Release of Liens

   d. Consent of Surety to Final Payment

F. Letter of Final Acceptance

1. Upon review and acceptance of Notice of Project Completion and Supporting Documentation, in accordance with General Conditions, the Engineer will issue Letter of Final Acceptance and release the Final Payment Request for payment.

END OF SECTION

SECTION 01 78 00

WARRANTIES AND BONDS

PART 1 GENERAL

1.01 SCOPE OF WORK

A. The Contractor shall do the following:

1. Compile specified warranties and bonds.
2. Co-execute submittals when so specified.
3. Review submittals to verify compliance with Contract Documents.
4. Submit submittals to the Engineer for review.

1.02 RELATED WORK

A. Section 00 C-610, Performance Bond

B. Section 00 C-615, Payment Bond

C. Section 01 03 00, Special Project Procedures.

D. Section 01 33 00, Submittals

E. Section 01 60 00, Product Requirements.

1.03 SUBMITTALS

The Contractor shall submit shop drawings in accordance with Section 01 33 00, Submittal Procedures:

A. Assemble warranties, bonds, and service and maintenance contracts executed by each of the respective manufacturers, suppliers, and subcontractors.

B. Electronically signed or physically signed and delivered electronically in PDF format.

C. Table of Contents: Neatly typed, in sequence of the Specifications. Provide completion information for each item as follows:

1. Product or work item.
2. Firm, address, telephone and fax numbers, and name and email of principal.
3. Scope.
4. Date of beginning of warranty, bond, or service and maintenance contract.
5. Duration of warranty, bond, or service and maintenance contract.
6. Provide information for Owner's personnel:
   a. Proper procedure in case of failure.

b. Instances that might affect the validity of the warranty or bond.

7. Contractor, with address, telephone, and fax numbers, and the name and email of the responsible principal.

D. Submittal of warranties, bonds, and service and maintenance contracts shall be included in submittals for review and before Final Completion, with actual dates included.

E. The Contractor's obligation to correct defective or nonconforming Work shall run for 1 year (or such longer period may otherwise be specified in the Contract Documents) beginning from the date Substantial Completion is achieved.

1.04 WARRANTIES

A. Warranties shall be in accordance with the Standard General Conditions and other applicable Sections.

B. All mechanical and electrical equipment, together with devices of whatever nature and all components which are furnished and/or installed by the Contractor shall be guaranteed.

C. The guarantee shall be against the manufacturing and/or design inadequacies, materials, and workmanship not in conformity, improper assembly, hidden damage, failure of devices and/or components, excessive leakage, or other circumstances which would cause the equipment to fail under normal design and/or specific operating conditions for 1 year or such longer period as may be shown and/or specified from and after the date of Substantial Completion.

D. The Contractor shall replace and install each piece of equipment, device, or component that shall fail within the term specified above of the guarantee with reasonable promptness without increase in the Contract Price. If the Contractor fails to provide timely repairs as specified in this Section, the Owner shall issue a claim against the Contractor's Bond. In some instances, if approved by the Owner, the Contractor may be allowed to repair the equipment.

1.05 DELIVERY, STORAGE, AND HANDLING

A. The Contractor shall adhere to the requirements specified in Section 01 66 00, Product Storage and Handling, for storing and protecting the items specified in this Section.

END OF SECTION

SECTION 01 78 39

PROJECT RECORD DOCUMENTS

PART 1 GENERAL

1.1 SUMMARY

A. Section Includes:

1. Work associated with documenting the project and recording changes to project documents, including, but not limited to, Record Drawings.

B. Related Specification Sections include, but are not necessarily limited to:

1. Section 01 00 00, General Requirements
2. Section 01 10 00, Summary of Work
3. Section 01 22 13, Measurement and Payment

1.2 MINIMUM RECORD DRAWING STANDARDS FOR ALL RECORD DRAWINGS SUBMITTED TO THE TOWN OF GREENVILLE

A. Record drawings shall be submitted to at least the level of detail in the contract documents. It is anticipated that the original contract documents shall serve as at least a background for all record information. Original drawings in CAD format may be requested from the Engineer.

1.3 PRICE AND PAYMENT PROCEDURES

A. Measurement and Payment

1. Work associated with this Item is included on the Bid Form. No separate payment in addition to the amount the Contractor submits on the Bid Form will be allowed for Project Record Documents.

1.4 SUBMITTALS

A. Prior to submitting a request for Final Inspection, provide Project Record Documents to the Engineer.

1.5 QUALITY ASSURANCE

A. Accuracy of Records

1. Thoroughly coordinate changes within the Record Documents, making adequate and proper entries on each page of Specifications and each sheet of Drawings and other Documents where such entry is required to show the change properly.
2. Accuracy of records shall be such that future search for items shown in the Contract Documents may rely reasonably on information obtained from the approved Project Record Documents.
3. To facilitate accuracy of records, make entries within 24 hours after receipt of information that the change has occurred.

4. Provide factual information regarding all aspects of the Work, both concealed and visible, to enable future modification of the Work to proceed without lengthy and expensive site measurement, investigation, and examination.

1.6 STORAGE AND HANDLING

A. Storage and Handling Requirements

1. Maintain the job set of Record Documents completely protected from deterioration and from loss and damage until completion of the Work and transfer of all recorded data to the final Project Record Documents.
2. In the event of loss of recorded data, use means necessary to again secure the data to the Engineer's approval.
   a. In such a case, provide replacements to the standards originally required by the Contract Documents.

PART 2 STANDARDS

2.1 REQUIREMENTS INCLUDED

A. Contractor shall maintain at the site for the Town one record copy of:

1. Drawings.
2. Specifications.
3. Addenda.
4. Change Orders and other modifications to the Contract.
5. Town’s field orders or written instructions.
6. Approved shop drawings, working drawings and samples.
7. Field test records.
8. Construction photographs.

2.2 MAINTENANCE OF DOCUMENTS AND SAMPLES

A. File documents and samples in accordance with CSI format.

B. Maintain documents in a clean, dry, legible, condition and in good order. Do not use record documents for construction purposes.

C. Make documents and samples available at all times for inspection by the Town.

2.3 RECORD DRAWINGS PREPARATION

A. Record information concurrently with construction progress.

B. Do not conceal any work until the required information is recorded.

C. Drawings; Legibly mark to record actual construction:

1. All underground piping with elevations and dimensions. Changes to piping location. Horizontal and vertical locations of underground utilities and appurtenances, referenced to permanent surface improvements. Actual installed pipe material, class, etc. Locations of drainage ditches, swales, water lines, and force mains shall be shown every 50 feet (measured along the centerline) or alternate lot lines, whichever is closer. Dimensions at these locations shall indicate distance from the centerline of the right-of-way to the facility.
2. Field changes of dimension and detail.
3. Changes made by Field Order or by Change Order.
4. Details not on original contract drawings.
5. Equipment and piping relocations.
6. Locations of all valves, fire hydrants, manholes, water and sewer services, water and force main fittings, underdrain cleanouts, catch basins, junction boxes, and any other structures located in the right-of-way or easement shall be located by elevation and by station and offset based on intersection P.I.'s and centerline of right-of-way. For facilities located on private roads, the dimensioning shall be from the centerline of paving or another readily visible baseline.
7. Elevations shall be provided for all manhole rims and inverts; junction box rims and inverts; catch basin rims and inverts; and baffle, weir, and invert elevations in control structures. Elevations shall also be provided at the PVI's and at every other lot line or 200 feet, whichever is less, of drainage swales and ditches. Benchmarks and elevation datum shall be indicated.
8. Slopes for pipes and ditches shall be recalculated, based on actual field-measured distances, elevations, pipe sizes, and type shown. Cross-section of drainage ditches and swales shall be verified.
9. Centerline of roads shall be tied to right-of-way lines. Elevation of roadway centerline shall be given at PVI's and at all intersections.
10. Record drawings shall show bearings and distances for all right-of-way and easement lines, and property corners.
11. Sidewalks, fences, and walls, if installed at the time of initial record drawing submittal, shall be located every 200 feet or alternate lot lines, whichever is closer. Dimensions shall include distance from the right-of-way line and the back of the curb and lot line or easement line.
12. Sanitary sewer mainline wyes shall be located from the downstream manhole. These dimensions shall be provided by on-site inspections or televiewing of the sewer following installation.
13. Allowable tolerance shall be ± 6.0 inches for horizontal dimensions. Vertical dimensions such as the difference in elevations between manhole inverts shall have an allowable tolerance of ± 1/8 inch per 50 feet (or part thereof) of horizontal distance up to a maximum tolerance of ± 2 inches.

14. Properly prepared record drawings on mylar, together with one (1) full-size copy and one (1) electronic copy on a USB drive, shall be certified by a design professional (Engineer and/or Surveyor registered in the State of Florida), employed by the Contractor, and submitted to the Town after Record Drawings are deemed acceptable to the Engineer.

D. Specifications and Addenda; Legibly mark each Section to record:

1. Manufacturer, trade name, catalog number, and supplier of each product and item of equipment installed.
2. Changes made by field order or by change order.

E. Shop Drawings (after final review and approval):

1. One electronic copy in PDF format for each process equipment, piping (including valves and fittings), structural component (including pads, slabs, buildings, etc.), electrical system, and instrumentation system.

2.4 SUBMITTAL

A. Prior to Final Completion, provide in electronic PDF format, signed and sealed Record Documents and Record Drawings to the Engineer. These will be reviewed and verified. If there are any required changes or additions, these shall be completed, and the entire signed and sealed set resubmitted prior to final pay application.

B. The Contractor shall employ a Professional Engineer or Surveyor registered in the State of Florida to verify survey data and properly prepare record drawings. Record drawings shall be certified by the professional(s) (Engineer or Surveyor licensed in Florida), as stipulated by the Land Development Ordinance, and submitted signed and sealed in PDF format and AutoCAD version 2024 or later.

C. All fonts, line types, shape files, external references, or other pertinent information used in the drawing and not normally included in AutoCAD shall be included on the media with a text file or attached, noted as to its relevance and use.

D. Accompany submittal with transmittal letter, containing:

1. Date.
2. Project title and number.
3. Contractor's name and address.
4. Title and number of each Record Document.
5. Signature of Contractor or his authorized representative.

Note: The data required to prepare these record drawings properly shall be obtained at the site, at no cost to the Town, by the design professional responsible or his/her duly appointed representative. The appointed representative shall be a qualified employee of the responsible design professional or a qualified inspector retained by the design professional responsible on a project-by-project basis.

PART 3 EXECUTION

3.1 MAINTENANCE OF DOCUMENTS

A. Maintenance of Job Set

1. Immediately upon receipt of the job set, identify each of the Documents with the title, "RECORD DOCUMENTS - JOB SET".
   a. Preservation
   b. Considering the Contract completion time, the probable number of occasions upon which the job set must be taken out for new entries and for examination, and the conditions under which these activities will be performed, devise a suitable method for protecting the job set.
   c. Do not use the job set for any purpose except entry of new data and for review by the Engineer, until the start of transfer of data to the final Project Record Documents.
   d. Maintain the job set at the site of work.
2. Coordination with Construction Survey
   a. At a minimum, clearly mark any deviations from Contract Documents associated with the installation of the infrastructure.
3. Making entries on Drawings
   a. Record any deviations from the Contract Documents.
   b. Identify locations of pipe segments with repaired damage.
   c. All notes shall be made in AutoCAD in a version suitable for the Engineer.
   d. Date all entries.
   e. Call attention to the entry by a "cloud" drawn around the area or areas affected.
   f. In the event of overlapping changes, use different colors for the overlapping changes.
4. Conversion of schematic layouts
   a. In some cases on the Drawings, arrangements of conduits, circuits, piping, ducts, and similar items are shown schematically and are not intended to portray precise physical layout.
      i. Final physical arrangement is determined by the Contractor, subject to the Engineer's approval.
      ii. However, design of future modifications of the facility may require accurate information as to the final physical layout of items which are shown only schematically on the Drawings.
   b. Show on the job set of Record Drawings, by dimension accurate to within 1 inch, the centerline of each run of items.
      i. Final physical arrangement is determined by the Contractor, subject to the Engineer's approval.

ii. Show, by symbol or note, the vertical location of the Item ("under slab", "in ceiling plenum", "exposed", and the like).

iii. Make all identification sufficiently descriptive so that it may be related reliably to the Specifications.

c. The Engineer may waive the requirements for conversion of schematic layouts where, in the Engineer's judgment, conversion serves no useful purpose. However, do not rely upon waivers being issued except as specifically issued in writing by the Engineer.

B. Final Project Record Documents

1. Transfer of data to Drawings

a. Carefully transfer the change data shown on the job set of Record Drawings to the corresponding final documents, coordinating the changes as required.

b. Clearly indicate at each affected detail and other Drawing a full description of changes made during construction, and the actual location of items.

c. Call attention to each entry by drawing a "cloud" around the area or areas affected.

d. Make changes neatly, consistently and with the proper media to assure longevity and clear reproduction.

2. Transfer of data to other Documents

a. If the Documents, other than Drawings, have been kept clean during progress of the Work, and if entries thereon have been orderly to the approval of the Engineer, the job set of those Documents, other than Drawings, will be accepted as final Record Documents.

b. If any such Document is not so approved by the Engineer, secure a new copy of that Document from the Engineer at the Engineer's usual charge for reproduction and handling, and carefully transfer the change data to the new copy to the approval of the Engineer.

END OF SECTION

SECTION 02 41 14

SELECTIVE UTILITY DEMOLITON / REMOVAL

PART 1 GENERAL

1.1 SUMMARY

A. Section Includes:

1. Direction for the removal or salvaging of the following utilities:

a. Existing bypass piping,

b. Associated valves/fittings,

c. Limited underground raw water piping,

d. Miscellaneous appurtenances shown on Drawings.

1.2 PRICE AND PAYMENT PROCEDURES

A. Measurement and Payment

1. Work associated with this Item is included on the Bid Form. No separate payment in addition to the amount the Contractor submits on the Bid Form will be allowed for Utility Removal.

1.3 ADMINISTRATIVE REQUIREMENTS

A. Coordination

1. Coordinate shutdowns with Owner
2. Coordinate salvage/disposal preferences with Owner.
3. Protect facilities remaining in service.

PART 2 EXECUTION

2.1 GENERAL

A. Remove utilities indicated on Drawings.

B. Cap/plug remaining active piping as shown.

C. Prevent debris from entering active systems.

D. Dispose of removed materials legally.

2.2 REMOVAL, SALVAGE, AND ABANDONMENT

A. Salvage materials identified by the Owner.

B. Deliver salvaged materials to location designated by Owner.

C. Existing Filter Tank

1. Existing filter tank remains.
2. Remove only piping/fittings/valves indicated.
3. Flush and clean tank as specified.

END OF SECTION

SECTION 33 11 12

POLYVINYL CHLORIDE (PVC) PRESSURE PIPE

PART 1 - GENERAL

1.1 SUMMARY

A. Section Includes:

1. Polyvinyl Chloride (PVC) Pressure Pipe 4-inch through 16-inch for potable water.

B. Related Specification Sections include, but are not necessarily limited to:

1. 33 04 45 – Pressure Testing of Piping
2. 33 05 10 – Utility Trench Excavation, Embedment and Backfill

1.2 REFERENCES

A. Reference Standards

1. Reference standards cited in this Specification refer to the current reference standard published at the time of the latest revision date logged at the end of this Specification, unless a date is specifically cited.
2. American Association of State Highway and Transportation Officials (AASHTO).
3. ASTM International (ASTM):

   a. D1784, Standard Specification for Rigid Poly(Vinyl-Chloride) (PVC) Compounds and Chlorinated Poly(Vinyl Chloride) (CPVC) Compounds.
   b. D3139, Standard Specification for Joints for Plastic Pressure Pipes Using Flexible Elastomeric Seals.

4. American Water Works Association (AWWA):

   a. C104/A21.4, Cement–Mortar Lining for Ductile-Iron Pipe and Fittings.
   b. C105/A21.5, Polyethylene Encasement for Ductile-Iron Pipe Systems.
   c. C110/A21.10, Ductile-Iron and Gray-Iron Fittings.
   d. C111/A21.11, Rubber-Gasket Joints for Ductile-Iron Pressure Pipe and Fittings.
   e. C600, Installation of Ductile-Iron Water Mains and their Appurtenances.
   f. C605, Underground Installation of Polyvinyl Chloride (PVC) Pressure Pipes and Fittings for Water.
   g. C900, Polyvinyl Chloride (PVC) Pressure Pipe, and Fabricated Fittings, 4 IN through 48 IN, for Water Transmission and Distribution.
   h. M23, PVC Pipe – Design and Installation.
   i. M41, Ductile-Iron Pipe and Fittings.

5. NSF International (NSF):

   a. 61, Drinking Water System Components – Health Effects.

6. Underwriters Laboratories, Inc. (UL).

1.3 SUBMITTALS

A. Submittals shall be in accordance with Section 01 33 00.
B. All submittals shall be approved by the Engineer prior to delivery.

1.4 ACTION SUBMITTALS / INFORMATIONAL SUBMITTALS

A. Product Data

1. For PVC Pressure Pipe that is used for water distribution, including:

a. PVC Pressure Pipe
b. Manufacturer
c. Dimension Ratio
d. Joint Types

2. Restraint, if required in Contract Documents

a. Retainer glands
b. Thrust harnesses
c. Any other means of restraint

3. Gaskets

B. Certificates

1. Furnish an affidavit certifying that all PVC Pressure Pipe meet the provisions of this Section, each run of pipe furnished has met Specifications, all inspections have been made and that all tests have been performed in accordance with AWWA C900.
2. Furnish a certificate stating that buried bolts and nuts conform to ASTM B117.
3. Furnish an affidavit certifying that all fasteners, excluding T-Bolts, shall conform to the Fastener Quality Act (FQA) (P.L. 106-34).

1.5 QUALITY ASSURANCE

A. Qualifications

1. Manufacturers

a. Manufacturer shall have a minimum of five (5) years of experience producing pipe of similar size and type.
b. Finished pipe shall be the product of one manufacturer, unless otherwise approved by the Engineer.

1) Materials associated with change orders, specials, and field changes may be provided by a different manufacturer upon Engineer approval.

c. Pipe manufacturing operations shall be performed under the control of the manufacturer.

d. All pipe furnished shall be in conformance with AWWA C900.

1) Manufactured in accordance with AWWA/ANSI C110/A21.10 and C1153/A21.53.

a) Perform quality control tests and maintain results as outlined within standard to assure compliance.

e. All gaskets shall meet or exceed the latest revisions NSF 61 and shall meet or exceed the requirements of this Specification.

B. Preconstruction Testing

1. The Owner may, at its own cost, subject random lengths of pipe for testing by an independent laboratory for compliance with this Specification.

a. The compliance test shall be performed in the United States.
b. Any visible defects or failure to meet the quality standards herein will be grounds for rejecting the entire order.

1.6 DELIVERY, STORAGE, AND HANDLING

A. Storage and Handling Requirements

1. Store and handle in accordance with the guidelines as stated in AWWA M23.
2. Secure and maintain a location to store the material in accordance with Section 01 66 00.

1.7 WARRANTY

A. Manufacturer Warranty

1. Manufacturer's Warranty shall be in accordance with Division 01.

PART 2 - PRODUCTS

2.1 EQUIPMENT, PRODUCT TYPES AND MATERIALS

A. Pipe:

1. Pipe shall be in accordance with AWWA C900 or AWWA C905.
2. PVC Pressure Pipe for potable water shall meet the requirements of NSF 61.
3. Pressure Pipe shall be approved by the UL.
4. Pipe shall have a lay length of 20 feet except for special fittings or closure pieces necessary to comply with the Drawings.
5. The pipe material shall be PVC, meeting the requirements of ASTM D1784, with a cell classification of 124540. Outside diameters must be equal to those of cast iron and ductile iron pipes.

6. As a minimum the following Dimension Ratio's apply:

Diameter (inch)	**Min Pressure Class (psi)**
4 through 12	DR 18
16	DR 18

7. Pipe Markings

   a. Meet the minimum requirements of AWWA C900. Minimum pipe markings shall be as follows:

      1) Manufacturer's Name or Trademark and production record
      2) Nominal pipe size
      3) Dimension Ratio
      4) AWWA C900
      5) Seal of testing agency that verified the suitability of the pipe

B. Pressure and Deflection Design

1. Pipe design shall be based on trench conditions and design pressure class specified in the Drawings. Pipe shall be designed according to the methods indicated in AWWA M23 for trench construction, using the following parameters:

   a. Unit Weight of Fill (w) = 130 pcf
   b. Live Load = AASHTO HS 20
   c. Trench Depth = 12 feet minimum, or as indicated in Drawings
   d. Maximum E' = 1,000 max
   e. Deflection Lag Factor = 1.0
   f. Working Pressure (P_w) = According to the Schedule in the Drawings
   g. Surge Allowance (P_s) = According to the Schedule in the Drawings
   h. Test Pressure = According to the Schedule in the Drawings
   i. Maximum Calculated Deflection = 5.0 percent
   j. Restrained Joint Safety Factor (SF) = 1.5
   k. Maximum Joint Deflection = 50 percent of the manufacturer's recommendations.

2. Verify trench depths after existing utilities are located.

   a. Accommodate vertical alignment changes required because of existing utility or other conflicts by an appropriate change in pipe design depth.
   b. In no case shall pipe be installed deeper than its design allows.

3. Provisions for Thrust

   a. Thrusts at bends, tees, plugs or other fittings shall be mechanically restrained joints when required by the Drawings.
   b. No thrust restraint contribution shall be allowed for the restrained length of pipe within the casing.

c. Restrained joints, where required, shall be used for a sufficient distance from each side of the bend, tee, plug, valve, or other fitting to resist thrust which will be developed at the design pressure of the pipe. For the purpose of thrust the following shall apply:

1) Calculate valves as dead ends.
2) Design pressure shall be the test pressure or 1.5 times the operating pressure, whichever is greater.
3) Restrained joints shall consist of approved mechanical restrained or push-on restrained joints as approved by the Engineer

d. The Pipe Manufacturer shall verify the length of pipe with restrained joints to resist thrust in accordance with the Drawings and the following:

1) Calculate the weight of the earth (W_e) as the weight of the projected soil prism above the pipe, for unsaturated soil conditions.
2) Soil density = 115 pcf (maximum value to be used), for unsaturated soil conditions
3) In locations where ground water is encountered, reduce the soil density to its buoyant weight for the backfill below the water table.

a) Reduce the coefficient of friction to 0.25.

4. Joints:

a. Joints shall be gasket, bell and spigot and push-on type conforming to ASTM D3139.
b. Since each pipe manufacturer has a different design for push-on joints, gaskets shall be part of a complete pipe section and purchased as such.
c. Lubricant must be non-toxic and NSF approved for potable water applications.
d. Push-On Restrained Joints shall only be as approved by the Engineer.

5. Detectable Markers:

a. Provide detectable markers in accordance with Section 33 05 26.

6. Joints:

a. Mechanical Joints with mechanical restraint

1) Comply with AWWA/ANSI C111/A21.11 and applicable parts of ANSI/AWWA C110/A21.10.
2) The retainer gland shall have the following working pressure ratings based on size and type of pipe:

a) PVC C900

(1) 3-inch – 12-inch, 305psi
(2) 14-inch – 16-inch, 235psi

b) Ratings are for water pressure and must include a minimum safety factor of 2 to 1 in all sizes

3) Retainer glands shall have specific designs for Ductile Iron and PVC and it should be easy to differentiate between the 2.
4) Gland body, wedges and wedge actuating components shall be cast from grade 65-45-12 ductile iron material in accordance with ASTM A536.

5) Mechanical joint restraint shall require conventional tools and installation procedures per AWWA C600, while retaining full mechanical joint deflection during assembly as well as allowing joint deflection after assembly.
6) Proper actuation of the gripping wedges shall be ensured with torque limiting twist off nuts.

7) A minimum of 6 wedges shall be required for 8 inch diameter PVC pipe.

b. Push-On, Restrained Joints

1) Restraining Push-on joints by means of a special gasket

a) The working pressure rating of the restrained gasket must exceed the test pressure of the pipe line to be installed.
b) Approved for use of restraining PVC Pipe in casing with a carrier pipe of 4-inches to 12-inches.
c) Otherwise only approved if specially listed on the drawings.

2) Push-on Restrained Joint bell and spigot

a) Pressure rating shall exceed the working and test pressure of the pipe line.

2.2 ACCESSORIES

A. Regulatory Requirements

1. All fasteners, excluding T-Bolts, shall conform to the Fastener Quality Act (FQA) (P.L. 106-34). All fasteners shall meet the marking requirements set forth by this Act.

B. T-Bolts and Nuts

1. Standard T-bolt and Nut

a. High strength, corrosion-resistant, low-carbon weathering steel in accordance with AWWA/ANSI C111/A21.11 and ASTM A242

2. Stainless Steel T-bolt with Stainless Steel Nut

a. Stainless Steel T-bolt and Nut in accordance with AISI 304.

C. Threaded Rods

1. Meet requirements of AWWA C207
2. Rods: ASTM A193, Grade B8, Class 1(AISI 304 Stainless Steel, carbide solution treated)
3. Nuts and Washers: ASTM A194, Grade 8 Nuts with AISI 304 Stainless Steel Washers

D. Petrolatum Tape System

1. Petrolatum Tape Primer: Denso Paste, or approved equal
2. Molding and Filler mastic: Densyl Mastic, or approved equal
3. All Purpose Petrolatum Tape: Densyl Tape, or approved equal

E. Gaskets

1. Push-on Gaskets

a. Conforming to the physical and marking requirements specified in ANSI/AWWA C111/A21.11.
b. All gaskets shall meet or exceed the latest revisions NSF 61.
c. Rubber gaskets shall be made of vulcanized styrene butadiene rubber SBR, unless otherwise specified in Drawings.
d. Gaskets shall be free from porous areas, foreign material and other defects that make them unfit for intended use.
e. Gaskets shall be the size and shape required to provide an adequate compressive force against the plain end and socket after assembly to affect a positive seal under all combinations of joint and gasket tolerances.

2. Mechanical Joint Gaskets

a. Conforming to the physical and marking requirements specified in ANSI/AWWA C111/A21.11.
b. All gaskets shall meet or exceed the latest revisions NSF 61.
c. Rubber gaskets shall be made of vulcanized styrene butadiene rubber SBR, unless otherwise specified in Drawings.
d. Gaskets shall be free from porous areas, foreign material and other defects that make them unfit for intended use.

PART 3 - EXECUTION

3.1 INSTALLATION

A. General

1. Install pipe, fittings, specials and appurtenances as specified herein, as specified in AWWA C600, AWWA C605, AWWA M23 and in accordance with the pipe manufacturer's recommendations.
2. Lay pipe to the lines and grades as indicated in the Drawings.
3. Excavate and backfill trenches in accordance with Section 33 05 10.
4. Embed PVC Pressure Pipe in accordance with Section 33 05 10.

B. Pipe Handling

1. Haul and distribute pipe and fittings at the project site.
2. Handle piping with care to avoid damage.

a. Inspect each joint of pipe and reject or repair any damaged pipe prior to lowering into the trench.
b. Use only nylon ropes, slings or other lifting devices that will not damage the surface of the pipe for handling the pipe.

3. At the close of each operating day:

a. Keep the pipe clean and free of debris, dirt, animals and trash – during and after the laying operation.
b. Effectively seal the open end of the pipe using a gasketed night cap.

C. Joint Making

1. Mechanical Joints

a. Bolt the follower ring into compression against the gasket with the bolts tightened down evenly then cross torqued in accordance with AWWA C600.
b. Overstressing of bolts to compensate for poor installation practice will not be permitted.
c. All mechanical joint fittings shall be restrained. Pipe joints shall be restrained as shown and specified.

2. Push-on Joints

a. Install Push-On joints as defined in AWWA C900.
b. Wipe clean the gasket seat inside the bell of all extraneous matter.
c. Place the gasket in the bell in the position prescribed by the manufacturer.
d. Apply a thin film of non-toxic vegetable soap lubricant to the inside of the gasket and the outside of the spigot prior to entering the spigot into the bell.
e. When using a field cut plain end piece of pipe, refinish the field cut to conform to AWWA C605.
f. Conform to manufacturer's installation guide for installing PVC pipe. Do not insert joint past the reference mark. If the reference mark is not visible, disengage and reinsert pipe joint.

3. Joint Deflection

a. Deflect the pipe only when necessary to avoid obstructions, or to meet the lines and grades shown in the Drawings.
b. Joint deflection shall not exceed 50 percent of the manufacturer's recommendation.

D. Detectable Metallic Tape Installation

1. See Section 33 05 26.

E. Polyethylene Encasement for ductile iron fittings and appurtenances shall be installed in accordance with Section 33 11 10.

F. Blocking

1. Install concrete blocking in accordance with Section 03 30 00 for all bends, tees, crosses and plugs in the pipe lines as indicated in the Drawings.
2. Place the concrete blocking so as to rest against firm undisturbed trench walls, normal to the thrust.
3. The supporting area for each block shall be at least as great as that indicated on the Drawings and shall be sufficient to withstand the thrust, including water hammer, which may develop.
4. Each block shall rest on a firm, undisturbed foundation or trench bottom.
5. If the Contractor encounters soil that appears to be different than that which was used to calculate the blocking according to the Drawings, the Contractor shall notify the Engineer prior to the installation of the blocking.

3.2 REPAIR/RESTORATION

A. Patching

1. Excessive field-patching of fitting coating is not permitted.
2. If interior lining of fitting is damaged to the point that repair is required, the fitting shall be replaced.

3. Patching of coating will be allowed where area to be repaired does not exceed 100 square inches and has no dimensions greater than 12 inches.
4. In general, there shall not be more than 1 patch of the coating of any 1 joint of pipe or any 1 fitting.
5. Wherever necessary to patch the fitting:

    a. Do not install patched pipe until the patch has been properly and adequately cured and approved for laying by the Engineer.

6. Promptly remove rejected pipe from the Site.

3.3 FIELD QUALITY CONTROL

A. Potable Water Mains

1. Cleaning, disinfection, hydrostatic testing, and bacteriological testing of water mains:

    a. Clean, flush, pig, disinfect, hydrostatic test and bacteriological test the water main

END OF SECTION

THIS PAGE INTENTIONALLY LEFT BLANK

SECTION 33 31 20

POLYVINYL CHLORIDE (PVC) GRAVITY SANITARY SEWER PIPE

PART 1 GENERAL

1.1 SUMMARY

A. Section Includes:

1. Polyvinyl Chloride (PVC) pipe 4-inch through 27-inch for gravity sanitary sewer applications
2. Section applies to work for all proposed filter system backwash effluent yard piping.

B. Related Specification Sections include, but are not necessarily limited to:

1. Applicable Division 01 Sections regarding contracting and general requirements.
2. Section 09 90 00, Painting and Coating
3. Section 09 90 01, Piping Color Coding and Labeling
4. Section 33 05 10, Utility Trench Excavation, Embedment, and Backfill.

1.2 REFERENCES

A. Reference Standards

1. Reference standards cited in this Specification refer to the current reference standard published at the time of the latest revision date logged at the end of this Specification, unless a date is specifically cited.
2. American Association of State Highway and Transportation (AASHTO).
3. ASTM International (ASTM):

   a. D1784, Standard Specification for Rigid Polyvinyl Chloride (PVC) Compounds and Chlorinated Polyvinyl Chloride (CPVC) Compounds.
   b. D2412, Standard Test Method for Determination of External Loading Characteristics of Plastic Pipe by Parallel-Plate Loading.
   c. D3034, Standard Specification for Type PSM Poly(Vinyl Chloride) (PVC) Sewer Pipe and Fittings.
   d. D3212, Standard Specification for Joints for Drain and Sewer Plastic Pipes Using Flexible Elastomeric Seals.
   e. F679, Standard Specification for Poly (Vinyl Chloride) (PVC) Large-Diameter Plastic Gravity Sewer Pipe and Fittings.

4. Underwriters Laboratories, Inc. (UL).

1.3 SUBMITTALS

A. In accordance with Section 01 33 00, Submittals.

B. All submittals shall be approved prior to delivery.

1.4 ACTION SUBMITTALS/INFORMATIONAL SUBMITTALS

A. Product Data

1. Product data sheet
2. Manufacturer
3. Nominal pipe diameter
4. Standard dimension ratio (SDR)
5. Cell classification
6. Laying lengths

B. Certificates

1. Furnish an affidavit certifying that all PVC Gravity Pipe meets the provisions of this Section and has been air and deflection tested and meets the requirements of ASTM D3034 and ASTM F679.

1.5 QUALITY ASSURANCE

A. Qualifications

1. Manufacturers

a. Finished pipe shall be the product of one (1) manufacturer for each size per project, unless otherwise approved by the Engineer.

1) Change orders, specials and field changes may be provided by a different manufacturer upon approval.

b. Pipe manufacturing operations shall be performed under the control of the manufacturer.
c. All pipe furnished shall be in conformance with ASTM D3034 (4-inch through 15-inch) and ASTM F679 (18-inch through 27-inch).

1.6 DELIVERY, STORAGE, AND HANDLING

1. In accordance with Section 01 66 00.

PART 2 PRODUCTS

2.1 EQUIPMENT, PRODUCT TYPES AND MATERIALS

A. Performance / Design Criteria

1. Pipe

a. AWWA C900 DR-18 PVC Mechanical Joint (MJ) Yard Piping
b. Schedule 80 PVC Drain Piping
c. PVC Gravity Sanitary Sewer Pipe shall be approved by the UL.
d. Assume a standard lay length of 14 feet and 20 feet except for special fittings or closure pieces necessary to comply with the Drawings.
e. Use green coloring for ground identification as sanitary sewer pipe.
f. PVC meeting the requirements of ASTM D1784, with a cell classification of 12454 or 12364

g. Deflection Design

1) Base pipe design on pipe stiffness, soil stiffness and load on the pipe.
2) Design pipe according to the Modified Iowa Formula as detailed by the Uni-Bell PVC Pipe Association in the Handbook of PVC Pipe, using the following parameters:

a) Unit Weight of Fill (w) = 130 pounds per cubic foot
b) Live Load = AASHTO HS 20
c) Trench Depth = 12 feet minimum, or as indicated in Drawings
d) Maximum (E') = 1,000 max
e) Deflection Lag Factor (DL) = 1.0
f) Bedding Factor constant (K) = 0.1
g) Mean radius of the pipe (r), inches, as indicated in Drawings
h) Marston's load per unit length (W), pounds per inch, calculate per Drawings
i) PVC modulus of elasticity (E) = 400,000 psi
j) Moment of inertia of pipe wall per unit length, (I) = $t^3/12$, (in^4/in), per pipe type and size

(1) Where (t) = pipe thickness, inches

k) Maximum Calculated Deflection = 5 percent

h. Pipe Flotation: If the pipe is buried in common saturated soil (about 120 pounds per cubic foot) with at least 1½ pipe diameters of cover, pipe is generally not subject to flotation. If shallower, check groundwater flotation potential. Flotation will occur if:

$$F_b > W_p + W_f + W_d$$

Where: F_b = buoyant force, pound per foot
W_p = empty pipe weight, pound per foot
W_f = weight of flooded soil, pound per foot
W_d = weight of dry soil, pound per foot

Values and formulas for the above variables can be obtained from the pipe manufacturer and site specific soil conditions.

i. Verify trench depths after existing utilities are located.
j. Accommodate vertical alignment changes required because of existing utility or other conflicts by an appropriate change in pipe design depth.
k. In no case shall pipe be installed deeper than its design allows.

2. Minimum pipe stiffness of 46 psi at 5 percent deflection when test in accordance with ASTM D2412.
3. Pipe markings

a. Meet the minimum requirements of ASTM D3034 and ASTM F679.
b. Minimum pipe markings shall be as follows:

1) Manufacturer's Name or Trademark and production record
2) Nominal pipe size
3) PVC cell classification
4) ASTM or Standard Dimension Ratio (SDR) designation
5) Seal of testing agency that verified the suitability of the pipe

4. Joints

    a. Joints shall be gasket, bell and spigot, push-on type conforming to ASTM D3212.
    b. Since each pipe manufacturer has a different design for push-on joints; gaskets shall be part of a complete pipe section and purchased as such.

PART 3 EXECUTION

3.1 INSTALLATION

A. General

1. Install pipe, specials and appurtenances as specified herein, as specified in Section 33 05 10, and in accordance with the pipe manufacturer's recommendations.
2. Lay pipe to the lines and grades as indicated in the Drawings.
3. Excavate and backfill trenches in accordance with Section 33 05 10.
4. Embed PVC pipe in accordance with Section 33 05 10.

B. Pipe Handling

1. Haul and distribute pipe and fittings at the project site.
2. Handle piping with care to avoid damage.

    a. Inspect each joint of pipe and reject or repair any damaged pipe prior to lowering into the trench.
    b. Use only nylon ropes, slings or other lifting devices that will not damage the surface of the pipe for handling the pipe.

3. At the close of each operating day:

    a. Keep the pipe clean and free of debris, dirt, animals and trash – during and after the laying operation.
    b. Effectively seal the open end of the pipe using a gasketed night cap.

C. Pipe Joint Installation

    a. Clean dirt and foreign material from the gasketed socket and the spigot end.
    b. Assemble pipe joint by sliding the lubricated spigot end into the gasketed bell end to the reference mark.
    c. Install such that identification marking on each joint are oriented upward toward the trench opening.
    d. When making connection to manhole, use an elastomeric seal or flexible boot to facilitate a seal.

3.2 FIELD [OR] SITE QUALITY CONTROL

    a. Verify the slope with CCTV after installation or Field Survey Elevations.

END OF SECTION

SECTION 03 10 00

CONCRETE FORMWORK

PART 1 GENERAL

1.1 SCOPE OF WORK

A. The Contractor shall furnish all labor, materials, equipment, and incidentals required to design, install, and remove formwork for cast-in-place concrete as shown on the Drawings and as specified in this Section.

B. Secure to forms as required or set for embedment as required all miscellaneous metal items, sleeves, reglets, anchor bolts, inserts, and other items furnished under other Sections and required to be cast into concrete or approved in advance by the Engineer.

1.2 RELATED WORK

A. Related Specification Sections include, but are not necessarily limited to:

1. Section 03 20 00, Concrete Reinforcement.
2. Section 03 25 00, Concrete Joints and Joint Accessories.
3. Section 03 30 00, Cast-in-Place Concrete.

1.3 SUBMITTALS

A. The Contractor shall submit shop drawings in accordance with Specification Section regarding Submittals:

1. Form release agent.
2. Form ties.

B. Samples

1. Demonstrate to the Engineer on a designated area of the concrete substructure exterior surface that the form release agent will not adversely affect concrete surfaces to be painted, coated, or otherwise finished and will not affect the forming materials.
2. Certify that the form release agent is suitable for use in contact with potable water after 30 days (non-toxic and free of taste and odor).

1.4 REFERENCE STANDARDS

Reference standards and recommended practices referred to in this Specification Section shall be the latest revision of any such document in effect at the bid time. The following documents are a part of this Section. Where this Section differs from these documents, the requirements of this Section shall apply.

A. American Concrete Institute (ACI)

1. ACI 301—Specifications for Structural Concrete.

2. ACI 318—Building Code Requirements for Structural Concrete and Commentary.

3. ACI 347—Guide to Formwork for Concrete.

B. American Plywood Association (APA)

1. Material grades and designations as specified

C. Where reference is made to one of the above standards, the revision in effect at the time of bid opening shall apply.

1.5 SYSTEM DESCRIPTION

A. Formwork shall be designed and erected in accordance with the requirements of ACI 301 and ACI 318 and as recommended in ACI 347 and shall comply with all applicable regulations and codes. The design shall consider any special requirements due to the use of plasticized and/or retarded set concrete.

PART 2 PRODUCTS

2.1 GENERAL

A. The use of a manufacturer's name and model or catalog number is to establish the standard of quality and general configurations desired.

2.2 MATERIALS

A. Forms for cast-in-place concrete shall be made of wood, metal, or other approved material. Construct wood forms of sound lumber or plywood of suitable dimensions and free from knotholes and loose knots. Where used for exposed surfaces, dress and match boards. Sand plywood smooth and fit adjacent panels with tight joints. Metal forms may be used when approved by the Engineer and shall be of an appropriate type for the class of work involved. All forms shall be designed and constructed to provide a flat, uniform concrete surface requiring minimal finishing or repairs.

B. Wall Forms

1. Forms for all exposed exterior and interior concrete walls shall be "Plyform" exterior-grade plywood panels manufactured in compliance with the APA and bearing the trademark of that group or an equal acceptable to the Engineer. Provide B grade or better veneer on all faces to be placed against concrete during forming. The class of material and grades of interior plies shall be of sufficient strength and stiffness to provide a flat, uniform concrete surface requiring minimal finishing and grinding.

2. All joints or gaps in forms shall be taped, gasketed, plugged, and/or caulked with an approved material so that the joint will remain watertight and will withstand placing pressures without bulging or creating surface patterns.

C. Rustication strips shall be at the location and shall conform to the details shown on the Drawings. Moldings for chamfers and rustications shall be milled and planed smooth. Rustications and corner strips shall be of a nonabsorbent material, compatible with the form surface, and fully sealed on all sides to prohibit the loss of paste or water between the two surfaces.

D. Column Forms

1. Rectangular columns shall be formed as specified for wall forms. All corners shall have a 3/4-inch chamfer unless otherwise noted on the Drawings.

E. Form Release Agent

1. Coat all forming surfaces in contact with concrete using an effective, non-staining, non-residual, water-based, bond-breaking form coating unless otherwise noted. Form release agents used in potable water containment structures shall be suitable for use in contact with potable water and shall be non-toxic and free of taste or odor.

F. Form Ties

1. Form ties encased in concrete other than those specified in the following paragraphs shall be designed so that after removal of the projecting part, no metal shall remain within 1 inch of the face of the concrete. The part of the tie to be removed shall be at least 1/2 inch in diameter or be provided with a wood or metal cone at least 1/2 inch in diameter and 1-1/2 inches long. Form ties in concrete exposed to view shall be the cone washer type.

2. Form ties for exposed exterior and interior walls shall be as specified in the preceding paragraph except that the cones shall be of approved wood or plastic.

3. Flat bar ties for panel forms, if used, shall have plastic or rubber inserts having a minimum depth of 1-1/2 inches and sufficient dimensions to permit proper patching of the tie hole.

4. Ties for liquid containment structures shall have an integral waterstop that is tightly welded to the tie.

5. Common wire shall not be used for form ties.

6. Alternate form ties consisting of tapered-through bolts at least 1 inch diameter at the smallest end or through bolts that use a removable tapered sleeve of the same minimum size may be used at the Contractor's option. Obtain the Engineer's acceptance of the system and spacing of ties before ordering or purchase forming. Clean, fill, and seal the form tie hole with non-shrink cement grout. The Contractor shall be responsible for watertightness of the form ties and any repairs needed.

PART 3 EXECUTION

3.1 GENERAL

A. Forms shall be used for all cast-in-place concrete, including sides of footings. Forms shall be constructed and placed so that the resulting concrete will be of the shape, lines, dimensions, and appearance indicated on the Drawings.

B. Forms for walls shall have removable panels at the bottom for cleaning, inspection, and joint surface preparation. Forms for walls of considerable height shall have closable intermediate inspection ports. Tremies and hoppers for placing concrete shall be used to allow concrete inspection, prevent segregation, and prevent the accumulation of hardened concrete on the forms above the fresh concrete.

C. Molding, bevels, or other types of chamfer strips shall be placed to produce blockouts, rustications, or chamfers as shown on the Drawings or as specified in this Section. Chamfer strips shall be provided at horizontal and vertical projecting corners to produce a 3/4-inch chamfer. Rectangular or trapezoidal moldings shall be placed in locations requiring sealants where specified or shown on the Drawings. Sizes of moldings shall conform to the sealant manufacturer's recommendations.

D. Forms shall be sufficiently rigid to withstand construction loads and vibration and to prevent displacement or sagging between supports. Construct forms so that the concrete will not be damaged by their removal. The Contractor shall be entirely responsible for the adequacy of the forming system.

E. Before form material is reused, all surfaces to be in contact with concrete shall be thoroughly cleaned, all damaged places repaired, all projecting nails withdrawn, and all protrusions smoothed. Reuse of wooden forms for other than rough finish will be permitted only if a "like new" condition of the form is maintained.

3.2 FORM TOLERANCES

A. Forms shall be surfaced, designed, and constructed in accordance with the recommendations of ACI 347 and shall meet the following additional requirements for the specified finishes:

1. Formed Surface Exposed to View: Edges of all form panels in contact with concrete shall be flush within 1/16 inch and forms for plane surfaces shall be such that the concrete will be planed within 3/16 inch in 4 feet. Forms shall be tight to prevent the passage of mortar, water, and grout. The maximum deviation of the finish wall surface at any point shall not exceed 1/4 inch from the intended surface as shown on the Drawings. Form panels shall be arranged symmetrically and in an orderly manner to minimize the number of seams.
2. Formed surfaces not exposed to view or buried shall meet requirements of Class "C" Surface in ACI 347.
3. Formed rough surfaces including mass concrete, pipe encasement, electrical duct encasement, and other similar installations shall have no minimum requirements for surface smoothness and surface deflections. The overall dimensions of the concrete shall be plus or minus 1 inch.

3.3 FORM PREPARATION

A. Wood forms in contact with the concrete shall be coated with an effective release agent before the forms are installed.

B. Steel forms shall be thoroughly cleaned and mill scale and other ferrous deposits shall be sandblasted or otherwise removed from the contact surface for all forms, except those used for surfaces receiving a rough finish. All forms shall have the contact surfaces coated with a release agent.

3.4 REMOVAL OF FORMS

A. The Contractor shall be responsible for all damage resulting from removing the forms. Forms and shoring for structural slabs or beams shall remain in place in accordance with ACI 301 and ACI 347. Form removal shall conform to the requirements specified in Section 033000, and a curing compound applied.

3.5 INSPECTION

A. The Engineer on site shall be notified when the forms are complete and ready for inspection at least 6 hours before the proposed concrete placement.

B. Failure of the forms to comply with the requirements specified in this Section or to produce concrete complying with requirements of this Section shall be grounds for rejection of that portion of the concrete work. Rejected work shall be repaired or replaced as directed by the Engineer at no additional cost to the Owner. Such repair or replacement shall be subject to the requirements of this Section and approval of the Engineer.

END OF SECTION

SECTION 03 20 00
CONCRETE REINFORCEMENT

PART 1 GENERAL

1.1 SCOPE OF WORK

A. Furnish all labor, materials, equipment, and incidentals required to fabricate, furnish, place, support, and secure reinforcing steel and accessories for cast-in-place concrete as shown on the Drawings and specified herein.

1.2 RELATED WORK

A. Section 03 10 00, Concrete Formwork.

B. Section 03 25 00, Concrete Joints and Joint Accessories.

C. Section 03 30 00, Cast-in-Place Concrete.

1.3 SUBMITTALS

A. The Contractor shall submit shop drawings in accordance with the Section 01 33 00, Submittals:

1. Reinforcing steel. Placement drawings shall conform to the recommendations of ACI 315. All reinforcement in a concrete placement shall be included on a single placement drawing or cross-referenced to the pertinent main placement drawing. The main drawing shall include the additional reinforcement (around openings, at corners, etc.) shown on the standard detail sheets. Bars to have special coatings and/or to be of special steel or special yield strength are to be clearly identified.
2. Bar bending details. The bars shall be referenced to the same identification marks shown on the placement drawings.
3. Schedule of all placements to contain synthetic reinforcing fibers. The amount of fibers per cubic yard to be used for each of the placements shall be noted on the schedule. The name of the manufacturer of the fibers and the product data shall be included with the submittal.

B. The Contractor shall submit test reports, in accordance with Specification Sections regarding testing, project closeout, etc., for each of the following items:

1. Certified copy of mill test results on each steel proposed for use showing the physical properties of the steel and the chemical analysis.
2. Welder's certification. The certification shall be in accordance with AWS D1.4 when welding of reinforcement is required.

PART 2 REFERENCE STANDARDS

2.1 Reference standards and recommended practices referred to in this specification section shall be the latest revision of any such document in effect at the bid time. The following documents are a part of this section. Where this section differs from these documents, the requirements of this section shall apply.

A. American Society for Testing and Materials (ASTM)

1. ASTM A82—Standard Specification for Steel Wire, Plain, for Concrete Reinforcement.
2. ASTM A184—Standard Specification for Welded Deformed Steel Bar Mats for Concrete Reinforcement.
3. ASTM A185—Standard Specification for Steel Welded Wire Reinforcement, Plain, for Concrete.
4. ASTM A496—Standard Specification for Steel Wire, Deformed, for Concrete Reinforcement.
5. ASTM A497—Standard Specification for Steel Welded Wire Reinforcement, Deformed, for Concrete.
6. ASTM A615—Standard Specification for Deformed and Plain Carbon-Steel Bars for Concrete Reinforcement.
7. ASTM A704—Standard Specification for Welded Steel Plain Bar or Rod Mats for Concrete Reinforcement.
8. ASTM A706—Standard Specification for Low-Alloy Steel Deformed and Plain Bars for Concrete Reinforcement.
9. ASTM A767—Standard Specification for Zinc-Coated (Galvanized) Steel Bars for Concrete Reinforcement.
10. ASTM A775—Standard Specification for Epoxy-Coated Steel Reinforcing Bars
11. ASTM A884— Standard Specification for Epoxy-Coated Steel Wire and Welded Wire Reinforcement.
12. ASTM A934—Standard Specification for Epoxy-Coated Prefabricated Steel Reinforcing Bars.
13. ASTM A996—Standard Specification for Rail-Steel and Axle-Steel Deformed Bars for Concrete Reinforcement.

B. American Concrete Institute (ACI)

1. ACI 301—Specifications for Structural Concrete.
2. ACI 315—Details and Detailing of Concrete Reinforcement.
3. ACI 318—Building Code Requirements for Reinforced Concrete and Commentary.
4. ACI SP 66—ACI Detailing Manual.

C. Concrete Reinforcing Steel Institute (CRSI)

1. Manual of Standard Practice.

D. American Welding Society (AWS)

1. AWS D1.4—Structural Welding Code-Reinforcing Steel.

2.2 WARRANTIES

A. Warranties shall be in accordance with any Section 01 78 00, Warranties and Bonds.

2.3 DELIVERY, STORAGE, AND HANDLING

A. The Contractor shall adhere to the requirements of Section 01 66 00, Product Delivery, Storage, and Handling Requirements, for storing and protecting the items specified in this Section.

B. Reinforcing steel shall be substantially free from mill scale, rust, dirt, grease, or other foreign matter.

C. Reinforcing steel shall be shipped and stored with bars of the same size and shape fastened in bundles with durable tags, marked in a legible manner with waterproof markings showing the same "mark" designations as those shown on the submitted Placing Drawings.

D. Reinforcing steel shall be stored off the ground and kept free from dirt, oil, or other injurious contaminants.

PART 3 PRODUCTS

3.1 MATERIALS

A. Materials shall be new, of domestic manufacture, and shall comply with the following material specifications.

B. Deformed Concrete Reinforcing Bars: ASTM A615, Grade 60 deformed bars.

C. Concrete Reinforcing Bars required on the Drawings to be Welded: ASTM A706.

D. Welded Steel Wire Fabric: ASTM A185. Provide in flat sheets.

E. The following alternate materials are allowed:

1. ASTM A615 Grade 60 may be used for ASTM A706, provided the following requirements are satisfied:

a. The actual yield strength of the reinforcing steel based on mill tests shall not exceed the specified yield strength by more than 18,000 psi. Retests shall not exceed this value by more than an additional 3,000 psi.

b. The ratio of the actual ultimate tensile strength to the actual tensile yield strength of the reinforcement shall not be less than 1.25.

c. The carbon equivalency (CE) of bars shall be 0.55 or less.

F. Reinforcing Steel Accessories

1. Plastic Protected Bar Supports: CRSI Bar Support Specifications, Class 1 Maximum Protection.
2. Stainless Steel Protected Bar Supports: CRSI Bar Support Specifications, Class 2 Moderate Protection.
3. Precast Concrete Block Bar Supports: CRSI Bar Support Specifications, Precast Blocks. Blocks shall have equal or greater strength than the surrounding concrete.
4. Steel Protected Bar Supports: #4 Steel Chairs with plastic or rubber tips.

G. Tie Wire

1. Tie Wires for Reinforcement shall be 16-gauge or heavier, black annealed wire, or stranded wire.

H. Mechanical reinforcing steel butt splices shall be positive connecting taper threaded type employing a hexagonal coupler such as Lenton rebar splices as manufactured by Erico Products Inc., Solon, OH, or equal. They shall meet all ACI 318 Building Code requirements. Bar ends must be taper threaded with the coupler manufacturer's bar threader to ensure proper taper and thread engagement. Bar couplers shall be torqued to the manufacturer's recommended value.

1. Unless otherwise noted on the Drawings, mechanical tension splices shall be designed to produce a splice strength in tension or compression of not less than 125% of the ASTM-specified minimum yield strength of the rebar.
2. Compression-type mechanical splices shall provide concentric bearing from one bar to the other bar and shall be capable of developing the ultimate strength of the rebar in compression.

3.2 FABRICATION

A. Fabrication of reinforcement shall be in compliance with the CRSI Manual of Standard Practice.

B. Bars shall be cold bent. Bars shall not be straightened or rebent.

C. Bars shall be bent around a revolving collar having a diameter of not less than that recommended by the ACI 318.

D. Bar ends that are to be butt spliced, placed through limited diameter holes in metal, or threaded shall have the applicable end(s) saw cut. Such ends shall terminate in flat surfaces within 1-1/2 degrees of a right angle to the axis of the bar.

PART 4 EXECUTION

4.1 INSTALLATION

A. Surface condition, bending, spacing, and tolerances of placement of reinforcement shall comply with the *CRSI Manual of Standard Practice*. The Contractor shall be solely responsible for providing an adequate number of bars and maintaining the spacing and clearances shown on the Drawings.

B. Except as otherwise indicated on the Drawings, the minimum concrete cover of reinforcement shall be as follows:

1. Concrete cast against and permanently exposed to earth: 3 inches.
2. Concrete exposed to soil, water, sewage, sludge and/or weather: 2 inches (including bottom cover of slabs over water or sewage).
3. Concrete not exposed to soil, water, sewage, sludge, and/or weather:
   a. Slabs (top and bottom cover), walls, joists, shells, and folded plate members: 1 inch.
   b. Beams and columns (principal reinforcement, ties, spirals, and stirrups): 1-1/2 inches.

C. Reinforcement which will be exposed for a considerable length of time after being placed shall be coated with a heavy coat of neat cement slurry.

D. No reinforcing steel bars shall be welded either during fabrication or erection unless specifically shown on the Drawings or specified in this Section or unless prior written approval has been obtained from the Engineer. All bars that have been welded, including tack welds, without such approval shall be immediately removed from the work. When welding of reinforcement is approved or called for, it shall comply with AWS D1.4.

E. Reinforcing steel interfering with the location of other reinforcing steel, conduits, or embedded items may be moved within the specified tolerances or one bar diameter, whichever is greater. Greater displacement of bars to avoid interference shall only be made with the approval of the Engineer. Do not cut reinforcement to install inserts, conduits, mechanical openings, or other items without the prior approval of the Engineer.

F. Securely support and tie reinforcing steel to prevent movement during concrete placement. Secure dowels in place before placing concrete.

G. Reinforcing steel bars shall not be field bent except where shown on the Drawings or specifically authorized in writing by the Engineer. If authorized, bars shall be cold bent around the standard diameter spool specified in the CRSI. Do not heat bars. Closely inspect the reinforcing steel for breaks. If the reinforcing steel is damaged, replace, Cadweld, or otherwise repair as directed by the Engineer. Do not bend reinforcement after it is embedded in concrete unless specifically shown otherwise on the Drawings.

4.2 REINFORCEMENT AROUND OPENINGS

A. Unless specific additional reinforcement around openings is shown on the Drawings, provide additional reinforcing steel on each side of the opening equivalent to one-half of

the cross-sectional area of the reinforcing steel interrupted by an opening. The bars shall have sufficient length to develop bonds at each end beyond the opening or penetration.

4.3 SPLICING OF REINFORCEMENT

A. Splices designated as compression splices on the Drawings, unless otherwise noted, shall be 30 bar diameters but not less than 12 inches. The lap splice length for column vertical bars shall be based on the bar size in the column above.

B. Tension lap splices shall be provided at all laps in compliance with ACI 318. Splices in adjacent bars shall be staggered. Class A splices may be used when 50% or less of the bars are spliced within the required lap length. Class B splices shall be used at all other locations.

4.4 ACCESSORIES

A. Determine, provide, and install accessories such as chairs, chair bars, and the like in sufficient quantities and strength to adequately support the reinforcement and prevent its displacement during the erection of the reinforcement and the placement of concrete.

B. Use precast concrete blocks where the reinforcing steel is to be supported over soil.

C. Stainless steel bar supports or steel chairs with stainless-steel tips shall be used where the chairs are set on forms for a concrete surface that will be exposed to weather, high humidity, or liquid (including bottom of slabs over liquid-containing areas). Use of galvanized or plastic-tipped metal chairs is permissible in all other locations unless otherwise noted on the Drawings or specified in this Section.

D. Alternate methods of supporting top steel in slabs, such as steel channels supported on the bottom steel or vertical reinforcing steel fastened to the bottom and top mats, may be used if approved by the Engineer.

4.5 INSPECTION

A. In no case shall any reinforcing steel be covered with concrete until the installation of the reinforcement, including the size, spacing, and position of the reinforcement has been observed by the Engineer and the Engineer's release to proceed with the concreting has been obtained. The Engineer shall be given ample prior notice of the readiness of placed reinforcement for observation. The forms shall be kept open until the Engineer has finished his/her observations of the reinforcing steel.

END OF SECTION

SECTION 03 25 00
CONCRETE JOINTS AND JOINT ACCESSORIES

PART 1 GENERAL

1.1 SCOPE OF WORK

A. Furnish all labor, materials, equipment, and incidentals required for construction of concrete joints and installation of joint accessories for cast-in-place concrete as indicated on the Drawings and specified herein.

1.2 RELATED WORK

A. Section 03 10 00, Concrete Formwork.

B. Section 03 20 00, Concrete Reinforcement.

C. Section 03 30 00, Cast-In-Place Concrete.

1.3 SUBMITTALS

A. The Contractor shall submit shop drawings in accordance with the Specification Section regarding Submittals:

1. Premolded joint fillers: Product data, including catalogue cut, technical data, storage requirements, installation requirements, location of use, and conformity to ASTM standards.
2. Bond breaker: Product data, including catalogue cut, technical data, storage requirements, installation requirements, location of use, and conformity to ASTM standards.
3. Expansion joint dowels: Product data on the complete assembly, including dowels, coatings, lubricants, spacers, sleeves, expansion caps, installation requirements, and conformity to ASTM standards.
4. Compressible joint filler: Product data, including catalogue cut, technical data, storage requirements, installation requirements, location of use, and conformity to ASTM standards.
5. Bonding agents: Product data, including catalogue cut, technical data, storage requirements, product life, application requirements, and conformity to ASTM standards.

B. Certifications

1. Certification that all materials used within the joint system are compatible with each other.
2. Certification that materials used in the construction of joints are suitable for use in contact with potable water 30 days after installation.

PART 2 REFERENCE STANDARDS

2.1 Reference standards and recommended practices referred to in this specification section shall be the latest revision of any such document in effect at the bid time. The following documents are a part of this section. Where this section differs from these documents, the requirements of this section shall apply.

A. American Society for Testing and Materials (ASTM)

1. ASTM A675—Standard Specification for Steel Bars, Carbon, Hot-Wrought, Special Quality, Mechanical Properties.
2. ASTM C881—Standard Specification for Epoxy-Resin-Base Bonding Systems for Concrete.
3. ASTM C1059—Standard Specification for Latex Agents for Bonding Fresh to Hardened Concrete.
4. ASTM D1751—Standard Specification for Preformed Expansion Joint Filler for Concrete Paving and Structural Construction (Nonextruding and Resilient Bituminous Types).
5. ASTM D1752—Standard Specification for Preformed Sponge Rubber Cork and Recycled PVC Expansion Joint Fillers for Concrete Paving and Structural Construction.

B. US Army Corps of Engineers (CRD)

1. CRD C572—Specification for Polyvinylchloride Waterstop.

C. Federal Specifications

1. FS SS-S-210A—Sealing Compound, Preformed Plastic, for Expansion Joints and Pipe Joints.

2.2 WARRANTIES

A. Warranties shall be in accordance with Section 01 78 00, Warranties and Bonds.

2.3 DELIVERY, STORAGE, AND HANDLING

A. The Contractor shall adhere to the requirements specified in Section 01 66 00, Product Delivery, Storage, and Handling Requirements.

2.4 GENERAL

A. The use of the manufacturer's name and model or catalog number is to establish the standard of quality and general configuration desired.

B. All materials used together in each joint (bond breakers, backer rods, joint fillers, sealants, etc.) shall be compatible with one another. Coordinate selection of suppliers and

products to ensure compatibility. Under no circumstances shall asphaltic bond breakers or joint fillers be used in joints receiving sealant.

C. All chemical sealant type waterstops shall be products specifically manufactured for the purpose for which they will be used and the products shall have been successfully used on similar structures for more than 5 years.

2.5 MATERIALS

A. Premolded Joint Filler

1. Premolded joint filler structures: Self-expanding cork, premolded joint filler shall conform to ASTM D1752, Type III. The thickness shall be 3/4 inch unless shown otherwise on the Drawings.

2. Premolded joint filler sidewalk and roadway concrete pavements or where fiber joint filler is specifically noted on the Drawings: The joint filler shall be asphalt impregnated fiber board conforming to ASTM D1751. Thickness shall be 3/4 inch unless otherwise shown on the Drawings.

B. Bond Breaker

1. Bond breaker tape shall be an adhesive-backed glazed butyl or polyethylene tape which will satisfactorily adhere to the premolded joint filler or concrete surface as required. The tape shall be the same width as the joint.

2. Except where tape is specifically called for on the Drawings, bond breaker for concrete shall be either bond breaker tape or a nonstaining type bond prevention coating such as Williams Tilt-up Compound by Williams Distributors Inc.; Silcoseal 77, by SCA Construction Supply Division, Superior Concrete Accessories, or equal.

C. Expansion Joint Dowels

1. Dowels shall be smooth steel conforming to ASTM A675, Grade 70. Dowels must be straight and clean, free of loose flaky rust and loose scale. Dowels may be sheared to length provided deformation from true shape caused by shearing does not exceed 0.04 inch on the diameter of the dowel and extends no more than 0.04 inch from the end. Bars shall be coated with a bond breaker on the expansion end of the dowel. Expansion caps shall be provided on the expansion end. Caps shall allow for at least 1-1/2 inches of expansion.

D. Bonding Agent

1. Epoxy bonding agent shall be a two-component, solvent-free, moisture-insensitive, epoxy-resin material conforming to ASTM C881, Type II. The bonding agent shall be Sikadur 32 Hi Mod by Sika Corporation of Lyndhurst, NJ; Concressive Liquid (LPL) by Master Builders of Cleveland, OH; or equal. Acrylic may be used if approved by the Engineer.

E. Compressible Joint Filler

1. The joint filler shall be a non-extruded watertight strip material use to fill expansion joints between structures. The material shall be capable of being compressed at least 40% for 70 hours at 68ºF and subsequently recovering at least 20% of its original thickness in the first half hour after unloading. Compressible joint filler shall be Evasote 380 E.S.P, by E Poxy Industries, Inc., Ravena, NY, Sikaflex 1a by Sika, or equal.

PART 3 EXECUTION

3.1 INSTALLATION

A. Construction Joints

1. Make construction joints only at locations shown on the Drawings or as approved by the Engineer. Any additional or relocation of construction joints proposed by the Contractor must be submitted to the Engineer for written approval.

2. Additional or relocated joints should be located where they least impair the strength of the member. In general, locate joints within the middle third of spans of slabs, beams, and girders. However, if a beam intersects a girder at the joint, offset the joint a distance equal to twice the width of the member being connected. Locate joints in walls and columns at the underside of floors, slabs, beams, or girders and at tops of footings or floor slabs. Do not locate joints between beams, girders, column capitals, or drop panels and the slabs above them. Do not locate joints between brackets or haunches and walls or columns supporting them.

3. All joints shall be perpendicular to the main reinforcement. Continue reinforcing steel through the joint as indicated on the Drawings. When joints in beams are allowed, provide a shear key and inclined dowels as approved by the Engineer.

4. Provide sealant grooves for joint sealant where indicated on the Drawings.

5. At all construction joints and at concrete joints designated on the Drawings to be "roughened," uniformly roughen the surface of the concrete to a full amplitude (distance between high and low points or side to side) of approximately 1/4 inch to expose a fresh face. Thoroughly clean joint surfaces of loose or weakened materials by waterblasting or sandblasting and prepare for bonding.

6. Provide waterstops in all wall and slab construction joints in liquid containment structures and at other locations shown on the Drawings.

7. Keyways shall not be used in construction joints unless specifically shown on the Drawings or approved by the Engineer.

B. Expansion Joints

1. Do not extend through expansion joints, reinforcement, or other embedded metal items that are continuously bonded to concrete on each side of joint.

2. Position premolded joint filler material accurately. Secure the joint filler against displacement during concrete placement and compaction. Place joint filler over the face of the joint, allowing for sealant grooves as detailed on the Drawings. Tape all joint filler splices to prevent intrusion of mortar. Seal expansion joints as shown on the Drawings.

3. Expansion joints shall be 3/4 inch wide unless otherwise noted on the Drawings.

4. Where indicated on the Drawings, install smooth dowels at right angles to expansion joints. Align dowels accurately with finished surface. Rigidly hold in place and support during concrete placement. Unless otherwise shown on the Drawings, apply oil or grease to one end of all dowels through expansion joints. Provide plastic expansion caps on the lubricated ends of expansion dowels.

5. Provide center-bulb-type waterstops in all wall and slab expansion joints in liquid containment structures and at other locations shown on the Drawings.

C. Contraction Joints

1. Provide sealant grooves, sealants, and waterstops at contraction joints in slabs on grade or walls as detailed. Provide waterstops at all wall and slab contraction joints in water containment structures and at other locations shown on the Drawings.

2. Contraction joints may be sawed if specifically approved by the Engineer. If contraction joint grooves are sawed, properly time the saw cutting with the time of the concrete set. Start cutting as soon as the concrete has hardened sufficiently to prevent aggregates from being dislodged by the saw. Complete cutting before shrinkage stresses have developed sufficiently to induce cracking. No reinforcing shall be cut during saw cutting.

3. Extend every other bar of reinforcing steel through contraction joints or as indicated on the Drawings. Where specifically noted on the Drawings, coat the concrete surface with a bond breaker before placing new concrete against it. Avoid coating reinforcement or waterstops with bond breaker at these locations.

END OF SECTION

SECTION 03 30 00

CAST-IN-PLACE CONCRETE

PART 1 GENERAL

1.1 SUMMARY

A. Furnish all labor, materials, equipment, and incidentals required for cast-in-place concrete, including concrete production, placement, finishing, curing, and testing as indicated on the Drawings and specified herein

1.2 RELATED WORK

A. Section 03 10 00, Concrete Formwork.

B. Section 03 20 00, Concrete Reinforcement.

C. Section 03 30 00, Cast-In-Place Concrete.

1.3 PRICE AND PAYMENT PROCEDURES

1. Measurement and Payment
   a. According to the Bid Form. No separate payment will be made other than what is specified in the Bid Form.

1.4 REFERENCES

A. Reference Standards

1. Reference standards cited in this Specification refer to the current reference standard published at the time of the latest revision date logged at the end of this Specification, unless a date is specifically cited.
2. American Association of State Highway and Transportation (AASHTO):

   a. M182, Burlap Cloth Made from Jute or Kenaf.

3. American Concrete Institute (ACI):

   a. ACI 117 Specification for Tolerances for Concrete Construction and Materials
   b. ACI 301 Specifications for Structural Concrete
   c. ACI 305.1 Specification for Hot Weather Concreting
   d. ACI 306.1 Standard Specification for Cold Weather Concreting
   e. ACI 308.1 Standard Specification for Curing Concrete
   f. ACI 318 Building Code Requirements for Structural Concrete
   g. ACI 347 Guide to Formwork for Concrete

4. American Institute of Steel Construction (AISC):

   a. 303, Code of Standard Practice for Steel Buildings and Bridges.

5. ASTM International (ASTM):

   a. A36, Standard Specification for Carbon Structural Steel.
   b. A153, Standard Specification for Zinc Coating (Hot-Dip) on Iron and Steel Hardware.

c. A193, Standard Specification for Alloy-Steel and Stainless Steel Bolting Materials for High-Temperature Service and Other Special Purpose Applications.
d. A615, Standard Specification for Deformed and Plain Carbon-Steel Bars for Concrete Reinforcement.
e. A706, Standard Specification for Low-Alloy Steel Deformed and Plain Bars for Concrete Reinforcement.
f. C31, Standard Practice for Making and Curing Concrete Test Specimens in the Field.
g. C33, Standard Specification for Concrete Aggregates.
h. C39, Standard Test Method for Compressive Strength of Cylindrical Concrete Specimens.
i. C42, Standard Test Method for Obtaining and Testing Drilled Cores and Sawed Beams of Concrete.
j. C94, Standard Specification for Ready-Mixed Concrete.
k. C109, Standard Test Method for Compressive Strength of Hydraulic Cement Mortars (Using 2-inch or {50-milimeter] Cube Specimens)
l. C143, Standard Test Method for Slump of Hydraulic-Cement Concrete.
m. C171, Standard Specification for Sheet Materials for Curing Concrete.
n. C150, Standard Specification for Portland Cement.
o. C172, Standard Practice for Sampling Freshly Mixed Concrete.
p. C219, Standard Terminology Relating to Hydraulic Cement.
q. C231, Standard Test Method for Air Content of Freshly Mixed Concrete by the Pressure Method.
r. C260, Standard Specification for Air-Entraining Admixtures for Concrete.
s. C309, Standard Specification for Liquid Membrane-Forming Compounds for Curing Concrete.
t. C494, Standard Specification for Chemical Admixtures for Concrete.
u. C618, Standard Specification for Coal Fly Ash and Raw or Calcined Natural Pozzolan for Use in Concrete.
v. C881, Standard Specification for Epoxy-Resin-Base Bonding Systems for Concrete.
w. C989, Standard Specification for Ground Granulated Blast-Furnace Slag for Use in Concrete and Mortars.
x. C1017, Standard Specification for Chemical Admixtures for Use in Producing Flowing Concrete.
y. C1059, Standard Specification for Latex Agents for Bonding Fresh to Hardened Concrete.
z. C1064, Standard Test Method for Temperature of Freshly Mixed Hydraulic-Cement Concrete.
aa. C1240, Standard Specification for Silica Fume Used in Cementitious Mixtures.
bb. E1155, Standard Test Method for Determining F_F Floor Flatness and F_L Floor Levelness Numbers.
cc. F436, Standard Specification for Hardened Steel Washers.

6. American Welding Society (AWS).

   a. D1.1, Structural Welding Code - Steel.
   b. D1.4, Structural Welding Code - Reinforcing Steel.

7. Concrete Reinforcing Steel Institute (CRSI)

   a. Manual of Standard Practice

1.5 ADMINISTRATIVE REQUIREMENTS

A. Work Included

1. Design, fabrication, erection, and stripping of formwork for cast-in-place concrete including shoring, reshoring, falsework, bracing, proprietary forming systems, prefabricated forms, void forms, permanent metal forms, bulkheads, keys, blockouts, sleeves, pockets, and accessories.

    a. Erection shall include installation in formwork of items furnished by other trades.

2. Furnish all labor and materials required to fabricate, deliver and install reinforcement and embedded metal assemblies for cast-in-place concrete, including steel bars, welded steel wire fabric, ties, supports and sleeves.

3. Furnish all labor and materials required to perform the following:

    a. Cast-in-place concrete
    b. Concrete mix designs
    c. Grouting

1.6 SUBMITTALS

A. Submittals shall be in accordance with Section 01 33 00.

B. All submittals shall be approved by the Engineer prior to delivery and/or fabrication for specials.

1.7 ACTION SUBMITTALS/INFORMATIONAL SUBMITTALS

A. Product Data

1. Required for each type of product indicated

B. Design Mixtures

1. For each concrete mixture submit proposed mix designs in accordance with ACI 318, chapter 5.

2. Submit each proposed mix design with a record of past performance.

3. Submit alternate design mixtures when characteristics of materials, Project conditions, weather, test results or other circumstances warrant adjustments.

4. Indicate amounts of mixing water to be withheld for later addition at Site.

    a. Include this quantity on delivery ticket.

C. Steel Reinforcement Submittals for Information

1. Mill test certificates of supplied concrete reinforcing, indicating physical and chemical analysis.

1.8 QUALITY ASSURANCE

A. Manufacturer Qualifications

1. A firm experienced in manufacturing ready-mixed concrete products and that complies with ASTM C94 requirements for production facilities and equipment.

2. Manufacturer certified according to NRMCA's "Certification of Ready Mixed Concrete Production Facilities"

B. Source Limitations

1. Obtain each type or class of cementitious material of the same brand from the same manufacturer's plant, obtain aggregate from a single source and obtain admixtures through a single source from a single manufacturer.

C. ACI Publications

1. Comply with the following unless modified by requirements in the Contract Documents:

a. ACI 301 Sections 1 through 5
b. ACI 117

D. Concrete Testing Service

1. Engage a qualified independent testing agency to perform material evaluation tests.

1.9 DELIVERY, STORAGE, AND HANDLING

A. Steel Reinforcement

1. Deliver, store, and handle steel reinforcement to prevent bending and damage.

2. Avoid damaging coatings on steel reinforcement.

PART 2 PRODUCTS

2.1 PRODUCT TYPES AND MATERIALS

A. Manufacturers

1. In other Part 2 articles where titles below introduce lists, the following requirements apply to product selection:

a. Available Products: Subject to compliance with requirements, products that may be incorporated into the Work include, but are not limited to, products specified.

b. Available Manufacturers: Subject to compliance with requirements, manufacturers offering products that may be incorporated into the Work include, but are not limited to, manufacturers specified.

B. Form-Facing Materials

1. Rough-Formed Finished Concrete

a. Plywood, lumber, metal or another approved material

b. Provide lumber dressed on at least 2 edges and 1 side for tight fit.

2. Chamfer Strips

a. Wood, metal, PVC or rubber strips
b. ¾-inch x ¾-inch, minimum

3. Rustication Strips

a. Wood, metal, PVC or rubber strips
b. Kerfed for ease of form removal

4. Form-Release Agent

a. Commercially formulated form-release agent that will not bond with, stain or adversely affect concrete surfaces
b. Shall not impair subsequent treatments of concrete surfaces
c. For steel form-facing materials, formulate with rust inhibitor.

5. Form Ties

a. Factory-fabricated, removable or snap-off metal or glass-fiber-reinforced plastic form ties designed to resist lateral pressure of fresh concrete on forms and to prevent spalling of concrete on removal.
b. Furnish units that will leave no corrodible metal closer than 1 inch to the plane of exposed concrete surface.
c. Furnish ties that, when removed, will leave holes no larger than 1 inch in diameter in concrete surface.
d. Furnish ties with integral water-barrier plates to walls indicated to receive dampproofing or waterproofing.

C. Steel Reinforcement

1. Reinforcing Bars

a. ASTM A615, Grade 60, deformed

D. Reinforcement Accessories

1. Smooth Dowel Bars

a. ASTM A615, Grade 60, steel bars (smooth)
b. Cut bars true to length with ends square and free of burrs.

2. Bar Supports

   a. Bolsters, chairs, spacers and other devices for spacing, supporting and fastening reinforcing bars and welded wire reinforcement in place

   b. Manufacture bar supports from steel wire, plastic or precast concrete according to CRSI's "Manual of Standard Practice," of greater compressive strength than concrete and as follows:

      1) For concrete surfaces exposed to view where legs of wire bar supports contact forms, use CRSI Class 1 plastic-protected steel wire or CRSI Class 2 stainless-steel bar supports.

      2) For slabs-on-grade, provide sand plates, horizontal runners or precast concrete blocks on bottom where base material will not support chair legs or where vapor barrier has been specified.

E. Embedded Metal Assemblies

1. Steel Shapes and Plates: ASTM A36

2. Headed Studs: Heads welded by full-fusion process, as furnished by TRW Nelson Stud Welding Division or approved equal

F. Expansion Anchors

1. Available Products

   a. Wej-it Bolt, Wej-it Corporation, Tulsa, Oklahoma
   b. Kwik Bolt II, Hilti Fastening Systems, Tulsa, Oklahoma
   c. Trubolt, Ramset Fastening Systems, Paris, Kentucky

G. Adhesive Anchors and Dowels

1. Adhesive anchors shall consist of threaded rods anchored with an adhesive system into hardened concrete or grout-filled masonry.

   a. The adhesive system shall use a 2-component adhesive mix and shall be injected with a static mixing nozzle following manufacturer’s instructions.
   b. The embedment depth of the rod shall provide a minimum allowable bond strength that is equal to the allowable yield capacity of the rod, unless otherwise specified.

2. Available Products

   a. Hilti HIT HY 150 Max
   b. Simpson Acrylic-Tie
   c. Powers Fasteners AC 100+ Gold

3. Threaded Rods: ASTM A193

   a. Nuts: ASTM A563 hex carbon steel
   b. Washers: ASTM F436 hardened carbon steel
   c. Finish: Hot-dip zinc coating, ASTM A153, Class C

H. Inserts

1. Provide metal inserts required for anchorage of materials or equipment to concrete construction where not supplied by other trades:

   a. In vertical concrete surfaces for transfer of direct shear loads only, provide adjustable wedge inserts of malleable cast iron complete with bolts, nuts and washers.

      1) Provide ¾-inch bolt size, unless otherwise indicated.

   b. In horizontal concrete surfaces and whenever inserts are subject to tension forces, provide threaded inserts of malleable cast iron furnished with full depth bolts.

      1) Provide ¾-inch bolt size, unless otherwise indicated.

I. Concrete Materials

1. Cementitious Material

   a. Use the following cementitious materials, of the same type, brand, and source, throughout Project:

      1) Portland Cement

         a) ASTM C150, Type I/II, gray
         b) Supplement with the following:

            (1) Fly Ash

               (a) ASTM C618, Class C or F

            (2) Ground Granulated Blast-Furnace Slag

               (a) ASTM C989, Grade 100 or 120.

      2) Silica Fume

         a) ASTM C1240, amorphous silica

      3) Normal-Weight Aggregates

         a) ASTM C33, Class 3S coarse aggregate or better, graded
         b) Provide aggregates from a single source.

      4) Maximum Coarse-Aggregate Size

         a) ¾-inch nominal

      5) Fine Aggregate

         a) Free of materials with deleterious reactivity to alkali in cement

      6) Water

         a) ASTM C94 and potable

J. Admixtures

1. Air-Entraining Admixture

   a. ASTM C260

2. Chemical Admixtures

   a. Provide admixtures certified by manufacturer to be compatible with other admixtures and that will not contribute water-soluble chloride ions exceeding those permitted in hardened concrete.
   b. Do not use calcium chloride or admixtures containing calcium chloride.
   c. Water-Reducing Admixture

      1) ASTM C494, Type A

   d. Retarding Admixture

      1) ASTM C494, Type B

   e. Water-Reducing and Retarding Admixture

      1) ASTM C494, Type D

   f. High-Range, Water-Reducing Admixture

      1) ASTM C494, Type F

   g. High-Range, Water-Reducing and Retarding Admixture

      1) ASTM C494, Type G

   h. Plasticizing and Retarding Admixture

      1) ASTM C1017, Type II

K. Curing Materials

1. Absorptive Cover

   a. AASHTO M182, Class 2, burlap cloth made from jute or kenaf, weighing approximately 9 ounces/square yard when dry

2. Moisture-Retaining Cover

   a. ASTM C171, polyethylene film or white burlap-polyethylene sheet

3. Water

   a. Potable

4. Clear, Waterborne, Membrane-Forming Curing Compound

    a. ASTM C309, Type 1, Class B, dissipating
    b. Available Products

        1) Anti-Hydro International, Inc.; AH Curing Compound #2 DR WB
        2) Burke by Edoco; Aqua Resin Cure
        3) ChemMasters; Safe-Cure Clear
        4) Conspec Marketing & Manufacturing Co., Inc., a Dayton Superior Company; W.B. Resin Cure
        5) Dayton Superior Corporation; Day Chem Rez Cure (J-11-W)
        6) Euclid Chemical Company (The); Kurez DR VOX
        7) Kaufman Products, Inc.; Thinfilm 420
        8) Lambert Corporation; Aqua Kure-Clear
        9) L&M Construction Chemicals, Inc.; L&M Cure R
        10) Meadows, W. R., Inc.; 1100 Clear
        11) Nox-Crete Products Group, Kinsman Corporation; Resin Cure E
        12) Symons Corporation, a Dayton Superior Company; Resi-Chem Clear Cure
        13) Tamms Industries, Inc.; Horncure WB 30
        14) Unitex; Hydro Cure 309
        15) US Mix Products Company; US Spec Maxcure Resin Clear
        16) Vexcon Chemicals, Inc.; Certi-Vex Enviocure 100

L. Related Materials

1. Bonding Agent

    a. ASTM C1059, Type II, non-redispersible, acrylic emulsion or styrene butadiene.

2. Epoxy Bonding Adhesive

    a. ASTM C881, 2-component epoxy resin, capable of humid curing and bonding to damp surfaces, of class suitable for application temperature and of grade to suit requirements, and as follows:

        1) Types I and II, non-load bearing
        2) IV and V, load bearing, for bonding
        3) Hardened or freshly mixed concrete to hardened concrete

3. Reglets

    a. Fabricate reglets of not less than 0.0217-inch thick, galvanized steel sheet
    b. Temporarily fill or cover face opening of reglet to prevent intrusion of concrete or debris.

4. Sleeves and Blockouts

    a. Formed with galvanized metal, galvanized pipe, polyvinyl chloride pipe, fiber tubes or wood

5. Nails, Spikes, Lag Bolts, Through Bolts, Anchorages

    a. Sized as required
    b. Shall be of strength and character to maintain formwork in place while placing concrete

M. Repair Materials

1. Repair Underlayment

a. Cement-based, polymer-modified, self-leveling product that can be applied in thicknesses of 1/8 inch or greater

1) Do not feather.

b. Cement Binder

1) ASTM C150, portland cement or hydraulic or blended hydraulic cement as defined in ASTM C219

c. Primer

1) Product of underlayment manufacturer recommended for substrate, conditions, and application

d. Aggregate

1) Well-graded, washed gravel, 1/8 to 1/4 inch or coarse sand as recommended by underlayment manufacturer

e. Compressive Strength

1) Not less than 3,000 psi at 28 days when tested according to ASTM C109/C109M

2. Repair Overlayment

a. Cement-based, polymer-modified, self-leveling product that can be applied in thicknesses of 1/8 inch or greater

1) Do not feather.

b. Cement Binder

1) ASTM C150, portland cement or hydraulic or blended hydraulic cement as defined in ASTM C219

c. Primer

1) Product of topping manufacturer recommended for substrate, conditions, and application

d. Aggregate

1) Well-graded, washed gravel, 1/8 to 1/4 inch or coarse sand as recommended by topping manufacturer

e. Compressive Strength

1) Not less than 3,000 psi at 28 days when tested according to ASTM C109

N. Concrete Mixtures, General

1. Prepare design mixtures for each type and strength of concrete, proportioned on the basis of laboratory trial mixture or field test data, or both, according to ACI 301.

   a. Required average strength above specified strength

      1) Based on a record of past performance

         a) Determination of required average strength above specified strength shall be based on the standard deviation record of the results of at least 30 consecutive strength tests in accordance with ACI 318, Chapter 5.3 by the larger amount defined by formulas 5-1 and 5-2.

      2) Based on laboratory trial mixtures

         a) Proportions shall be selected on the basis of laboratory trial batches prepared in accordance with ACI 318, Chapter 5.3.3.2 to produce an average strength greater than the specified strength f'c by the amount defined in table 5.3.2.2.

      3) Proportions of ingredients for concrete mixes shall be determined by an independent testing laboratory or qualified concrete supplier.
      4) For each proposed mixture, at least 3 compressive test cylinders shall be made and tested for strength at the specified age.

         a) Additional cylinders may be made for testing for information at earlier ages.

2. Cementitious Materials

   a. Limit percentage, by weight, of cementitious materials other than portland cement in concrete as follows, unless specified otherwise:

      1) Fly Ash: 25 percent
      2) Combined Fly Ash and Pozzolan: 25 percent
      3) Ground Granulated Blast-Furnace Slag: 50 percent
      4) Combined Fly Ash or Pozzolan and Ground Granulated Blast-Furnace Slag: 50 percent
      5) Portland cement minimum, with fly ash or pozzolan not exceeding 25 percent
      6) Silica Fume: 10 percent
      7) Combined Fly Ash, Pozzolans, and Silica Fume: 35 percent with fly ash or pozzolans not exceeding 25 percent and silica fume not exceeding 10 percent
      8) Combined Fly Ash or Pozzolans, Ground Granulated Blast-Furnace Slag, and Silica Fume: 50 percent with fly ash or pozzolans not exceeding 25 percent and silica fume not exceeding 10 percent

3. Limit water-soluble, chloride-ion content in hardened concrete to:

   a. 0.30 percent by weight of cement if concrete will have no exposure to chlorides (typical)
   b. 0.15 percent by weight if concrete will be exposed to chlorides
   c. 1.0 percent by weight if concrete will have no exposure to chlorides and will be continually dry and protected.

4. Admixtures

   a. Use admixtures according to manufacturer's written instructions.
   b. Do not use admixtures which have not been incorporated and tested in accepted mixes.
   c. Use water-reducing high-range water-reducing or plasticizing admixture in concrete, as required, for placement and workability.
   d. Use water-reducing and retarding admixture when required by high temperatures, low humidity or other adverse placement conditions.
   e. Use water-reducing admixture in pumped concrete, concrete for heavy-use industrial slabs and parking structure slabs, concrete required to be watertight, and concrete with a water-cementitious materials ratio below 0.50.
   f. Use corrosion-inhibiting admixture in concrete mixtures where indicated.

O. Concrete Mixtures

1. Refer to FDOT “Standard Specifications for Construction and Maintenance of Highways, Streets, and Bridges” for:

   a. Culverts
   b. Headwalls
   c. Wingwalls

2. Proportion normal-weight concrete mixture as follows:

   a. Minimum Compressive Strength: 3,000 psi at 28 days
   b. Maximum Water-Cementitious Materials Ratio: 0.50
   c. Slump Limit: 5 inches or 8 inches for concrete with verified slump of 2 to 4 inches before adding high-range water-reducing admixture or plasticizing admixture, plus or minus 1 inch
   d. Air Content: 6 percent, plus or minus 1.5 percent at point of delivery for 3/4-inch nominal maximum aggregate size

P. Fabricating Reinforcement

1. Fabricate steel reinforcement according to CRSI's "Manual of Standard Practice."

Q. Fabrication of Embedded Metal Assemblies

1. Fabricate metal assemblies in the shop. Holes shall be made by drilling or punching. Holes shall not be made by or enlarged by burning. Welding shall be in accordance with AWS D1.1.
2. Metal assemblies exposed to earth, weather or moisture shall be hot dip galvanized. All other metal assemblies shall be either hot dip galvanized or painted with an epoxy paint. Repair galvanizing after welding with a Cold Galvanizing compound installed in accordance with the manufacturer's instructions. Repair painted assemblies after welding with same type of paint.

R. Concrete Mixing

1. Ready-Mixed Concrete: Measure, batch, mix, and deliver concrete according to ASTM C94, and furnish batch ticket information.

   a. When air temperature is between 85 and 90 degrees Fahrenheit, reduce mixing and delivery time from 1-1/2 hours to 75 minutes; when air temperature is above 90 degrees Fahrenheit, reduce mixing and delivery time to 60 minutes.

2. Project-Site Mixing: Measure, batch, and mix concrete materials and concrete according to ASTM C94/C94M. Mix concrete materials in appropriate drum-type batch machine mixer.

   a. For mixer capacity of 1 cubic yard or smaller, continue mixing at least 1-1/2 minutes, but not more than 5 minutes after ingredients are in mixer, before any part of batch is released.
   b. For mixer capacity larger than 1 cubic yard, increase mixing time by 15 seconds for each additional 1 cubic yard.
   c. Provide batch ticket for each batch discharged and used in the Work, indicating Project identification name and number, date, mixture type, mixture time, quantity, and amount of water added. Record approximate location of final deposit in structure.

PART 3 EXECUTION

3.1 INSTALLATION

A. Formwork

1. Design, erect, shore, brace, and maintain formwork, according to ACI 301, to support vertical, lateral, static, and dynamic loads, and construction loads that might be applied, until the structure can support such loads.

2. Construct formwork so concrete members and structures are of size, shape, alignment, elevation, and position indicated, within tolerance limits of ACI 117.

   a. Vertical alignment

      1) Lines, surfaces and arises less than 100 feet in height - 1 inch.
      2) Outside corner of exposed corner columns and control joints in concrete exposed to view less than 100 feet in height - 1/2 inch.
      3) Lines, surfaces and arises greater than 100 feet in height - 1/1000 times the height but not more than 6 inches.
      4) Outside corner of exposed corner columns and control joints in concrete exposed to view greater than 100 feet in height - 1/2000 times the height but not more than 3 inches.

   b. Lateral alignment

      1) Members - 1 inch.
      2) Centerline of openings 12 inches or smaller and edge location of larger openings in slabs - 1/2 inch.
      3) Sawcuts, joints, and weakened plane embedments in slabs - 3/4 inch.

c. Level alignment

1) Elevation of slabs-on-grade - 3/4 inch.
2) Elevation of top surfaces of formed slabs before removal of shores - 3/4 inch.
3) Elevation of formed surfaces before removal of shores - 3/4 inch.

d. Cross-sectional dimensions: Overall dimensions of beams, joists, and columns and thickness of walls and slabs.

1) 12 inch dimension or less - plus 1/2 inch to minus 1/4 inch.
2) Greater than 12 inch to 3 foot dimension - plus 1/2 inch to minus 3/8 inch.
3) Greater than 3 foot dimension - plus 1 inch to minus 3/4 inch.

e. Relative alignment

1) Stairs

a) Difference in height between adjacent risers - 1/8 inch.
b) Difference in width between adjacent treads - 1/4 inch.
c) Maximum difference in height between risers in a flight of stairs - 3/8 inch.
d) Maximum difference in width between treads in a flight of stairs - 3/8 inch.

2) Grooves

a) Specified width 2 inches or less - 1/8 inch.
b) Specified width between 2 inches and 12 inches - 1/4 inch.

3) Vertical alignment of outside corner of exposed corner columns and control joint grooves in concrete exposed to view - 1/4 inch in 10 feet.

4) All other conditions - 3/8 inch in 10 feet.

3. Limit concrete surface irregularities, designated by ACI 347R as abrupt or gradual, as follows:

a. Class B, 1/4 inch for smooth-formed finished surfaces.
b. Class C, 1/2 inch for rough-formed finished surfaces.

4. Construct forms tight enough to prevent loss of concrete mortar.

5. Fabricate forms for easy removal without hammering or prying against concrete surfaces. Provide crush or wrecking plates where stripping may damage cast concrete surfaces. Provide top forms for inclined surfaces steeper than 1.5 horizontal to 1 vertical.

a. Install keyways, reglets, recesses, and the like, for easy removal.
b. Do not use rust-stained steel form-facing material.

6. Set edge forms, bulkheads, and intermediate screed strips for slabs to achieve required elevations and slopes in finished concrete surfaces. Provide and secure units to support screed strips; use strike-off templates or compacting-type screeds.

7. Construct formwork to cambers shown or specified on the Drawings to allow for structural deflection of the hardened concrete. Provide additional elevation or camber in formwork as required for anticipated formwork deflections due to weight and pressures of concrete and construction loads.

8. Foundation Elements: Form the sides of all below grade portions of beams, pier caps, walls, and columns straight and to the lines and grades specified. Do no earth form foundation elements unless specifically indicated on the Drawings.

9. Provide temporary openings for cleanouts and inspection ports where interior area of formwork is inaccessible. Close openings with panels tightly fitted to forms and securely braced to prevent loss of concrete mortar. Locate temporary openings in forms at inconspicuous locations.

10. Chamfer exterior corners and edges of permanently exposed concrete.

11. Form openings, chases, offsets, sinkages, keyways, reglets, blocking, screeds, and bulkheads required in the Work. Determine sizes and locations from trades providing such items.

12. Clean forms and adjacent surfaces to receive concrete. Remove chips, wood, sawdust, dirt, and other debris just before placing concrete.

13. Retighten forms and bracing before placing concrete, as required, to prevent mortar leaks and maintain proper alignment.

14. Coat contact surfaces of forms with form-release agent, according to manufacturer's written instructions, before placing reinforcement, anchoring devices, and embedded items.

    a. Do not apply form release agent where concrete surfaces are scheduled to receive subsequent finishes which may be affected by agent. Soak contact surfaces of untreated forms with clean water. Keep surfaces wet prior to placing concrete.

B. Embedded Items

1. Place and secure anchorage devices and other embedded items required for adjoining work that is attached to or supported by cast-in-place concrete. Use setting drawings, templates, diagrams, instructions, and directions furnished with items to be embedded.

    a. Install anchor rods, accurately located, to elevations required and complying with tolerances in AISC 303, Section 7.5.

        1) Spacing within a bolt group: 1/8 inch
        2) Location of bolt group (center): ½ inch
        3) Rotation of bolt group: 5 degrees
        4) Angle off vertical: 5 degrees
        5) Bolt projection: ± 3/8 inch

    b. Install reglets to receive waterproofing and to receive through-wall flashings in outer face of concrete frame at exterior walls, where flashing is shown at lintels, shelf angles, and other conditions.

C. Removing and Reusing Forms

1. Do not backfill prior to concrete attaining 70 percent of its 28-day design compressive strength.

2. General: Formwork for sides of beams, walls, columns, and similar parts of the Work that does not support weight of concrete may be removed after cumulatively curing at not less than 50 degrees Fahrenheit for 24 hours after placing concrete, if concrete is hard enough to not be damaged by form-removal operations and curing and protection operations are maintained.

   a. Leave formwork for beam soffits, joists, slabs, and other structural elements that supports weight of concrete in place until concrete has achieved at least 70 percent of its 28-day design compressive strength.

   b. Do not remove formwork supporting conventionally reinforced concrete until concrete has attained 70 percent of its specified 28-day compressive strength as established by tests of field cured cylinders. In the absence of cylinder tests, supporting formwork shall remain in place until the concrete has cured at a temperature of at least 50 degrees Fahrenheit for the minimum cumulative time periods given in ACI 347, Section 3.7.2.3. Add the period of time when the surrounding air temperature is below 50 degrees Fahrenheit, to the minimum listed time period. Formwork for 2-way conventionally reinforced slabs shall remain in place for at least the minimum cumulative time periods specified for 1-way slabs of the same maximum span.

   c. Immediately reshore 2-way conventionally reinforced slabs after formwork removal. Reshores shall remain until the concrete has attained the specified 28-day compressive strength.

   d. Minimum cumulative curing times may be reduced by the use of high-early strength cement or forming systems which allow form removal without disturbing shores, but only after the Contractor has demonstrated to the satisfaction of the Engineer that the early removal of forms will not cause excessive sag, distortion or damage to the concrete elements.

   e. Completely remove wood forms. Provide temporary openings if required.

   f. Provide adequate methods of curing and thermal protection of exposed concrete if forms are removed prior to completion of specified curing time.

   g. Reshore areas required to support construction loads in excess of 20 pounds per square foot to properly distribute construction loading. Construction loads up to the rated live load capacity may be placed on unshored construction provided the concrete has attained the specified 28-day compressive strength.

   h. Obtaining concrete compressive strength tests for the purposes of form removal is the responsibility of the Contractor.

   i. Remove forms only if shores have been arranged to permit removal of forms without loosening or disturbing shores.

3. Clean and repair surfaces of forms to be reused in the Work. Split, frayed, delaminated, or otherwise damaged form-facing material will not be acceptable for exposed surfaces. Apply new form-release agent.

4. When forms are reused, clean surfaces, remove fins and laitance, and tighten to close joints. Align and secure joints to avoid offsets. Do not use patched forms for exposed concrete surfaces unless approved by Engineer.

D. Shores and Reshores

1. The Contractor is solely responsible for proper shoring and reshoring.

2. Comply with ACI 318 and ACI 301 for design, installation, and removal of shoring and reshoring.

   a. Do not remove shoring or reshoring until measurement of slab tolerances is complete.

3. Plan sequence of removal of shores and reshore to avoid damage to concrete. Locate and provide adequate reshoring to support construction without excessive stress or deflection.

E. Steel Reinforcement

1. General: Comply with CRSI's "Manual of Standard Practice" for placing reinforcement.

   a. Do not cut or puncture vapor retarder. Repair damage and reseal vapor retarder before placing concrete.

2. Clean reinforcement of loose rust and mill scale, earth, ice, and other foreign materials that would reduce bond to concrete.

3. Accurately position, support, and secure reinforcement against displacement. Locate and support reinforcement with bar supports to maintain minimum concrete cover. Do not tack weld crossing reinforcing bars.

   a. Weld reinforcing bars according to AWS D1.4, where indicated. Only steel conforming to ASTM A706 may be welded.

4. Installation tolerances

   a. Top and bottom bars in slabs, girders, beams and joists:

      1) Members 8 inches deep or less: ±3/8 inch
      2) Members more than 8 inches deep: ±1/2 inch

   b. Concrete Cover to Formed or Finished Surfaces: ±3/8 inches for members 8 inches deep or less; ±1/2 inches for members over 8 inches deep, except that tolerance for cover shall not exceed 1/3 of the specified cover.

5. Concrete Cover

   a. Reinforcing in structural elements deposited against the ground: 3 inches
   b. Reinforcing in formed beams, columns and girders: 1-1/2 inches
   c. Grade beams and exterior face of formed walls and columns exposed to weather or in contact with the ground: 2 inches

d. Interior faces of walls: 1 inches
e. Slabs: 3/4 inches

6. Splices: Provide standard reinforcement splices by lapping and tying ends. Comply with ACI 318 for minimum lap of spliced bars where not specified on the documents. Do not lap splice no. 14 and 18 bars.

7. Field Welding of Embedded Metal Assemblies

a. Remove all paint and galvanizing in areas to receive field welds.

b. Field Prepare all areas where paint or galvanizing has been removed with the specified paint or cold galvanizing compound, respectively.

F. Joints

1. General: Construct joints true to line with faces perpendicular to surface plane of concrete.

2. Construction Joints: Install so strength and appearance of concrete are not impaired, at locations indicated or as approved by Engineer.

a. Place joints perpendicular to main reinforcement. Continue reinforcement across construction joints, unless otherwise indicated. Do not continue reinforcement through sides of strip placements of floors and slabs.

b. Form keyed joints as indicated. Embed keys at least 1-1/2 inches into concrete.
c. Locate joints for beams, slabs, joists, and girders in the middle third of spans. Offset joints in girders a minimum distance of twice the beam width from a beam-girder intersection.

d. Locate horizontal joints in walls and columns at underside of floors, slabs, beams, and girders and at the top of footings or floor slabs.

e. Space vertical joints in walls as indicated. Locate joints beside piers integral with walls, near corners, and in concealed locations where possible.

f. Use a bonding agent at locations where fresh concrete is placed against hardened or partially hardened concrete surfaces.

3. Doweled Joints: Install dowel bars and support assemblies at joints where indicated. Lubricate or asphalt coat 1-1/2 of dowel length to prevent concrete bonding to 1 side of joint.

G. Waterstops

1. Flexible Waterstops: Install in construction joints and at other joints indicated to form a continuous diaphragm. Install in longest lengths practicable. Support and protect exposed waterstops during progress of the Work. Field fabricate joints in waterstops according to manufacturer's written instructions.

2. Self-Expanding Strip Waterstops: Install in construction joints and at other locations indicated, according to manufacturer's written instructions, adhesive bonding, mechanically fastening, and firmly pressing into place. Install in longest lengths practicable.

H. Adhesive Anchors

1. Comply with the manufacturer's installation instructions on the hole diameter and depth required to fully develop the tensile strength of the adhesive anchor or reinforcing bar.

2. Properly clean out the hole utilizing a wire brush and compressed air to remove all loose material from the hole, prior to installing adhesive material.

I. Concrete Placement

1. Before placing concrete, verify that installation of formwork, reinforcement, and embedded items is complete and that required inspections have been performed.

2. Do not add water to concrete during delivery, at Project site, or during placement unless approved by Engineer.

3. Before test sampling and placing concrete, water may be added at Project site, subject to limitations of ACI 301.

   a. Do not add water to concrete after adding high-range water-reducing admixtures to mixture.
   b. Do not exceed the maximum specified water/cement ratio for the mix.

4. Deposit concrete continuously in 1 layer or in horizontal layers of such thickness that no new concrete will be placed on concrete that has hardened enough to cause seams or planes of weakness. If a section cannot be placed continuously, provide construction joints as indicated. Deposit concrete to avoid segregation.

   a. Deposit concrete in horizontal layers of depth to not exceed formwork design pressures, 15 feet maximum and in a manner to avoid inclined construction joints.

   b. Consolidate placed concrete with mechanical vibrating equipment according to ACI 301.
   c. Do not use vibrators to transport concrete inside forms. Insert and withdraw vibrators vertically at uniformly spaced locations to rapidly penetrate placed layer and at least 6 inches into preceding layer. Do not insert vibrators into lower layers of concrete that have begun to lose plasticity. At each insertion, limit duration of vibration to time necessary to consolidate concrete and complete embedment of reinforcement and other embedded items without causing mixture constituents to segregate.

   d. Do not permit concrete to drop freely any distance greater than 10 feet for concrete containing a high range water reducing admixture (superplasticizer) or 5 feet for other concrete. Provide chute or tremie to place concrete where longer drops are necessary. Do not place concrete into excavations with standing water. If place of deposit cannot be pumped dry, pour concrete through a tremie with its outlet near the bottom of the place of deposit.

   e. Discard pump priming grout and do not use in the structure.

5. Deposit and consolidate concrete for floors and slabs in a continuous operation, within limits of construction joints, until placement of a panel or section is complete.

a. Consolidate concrete during placement operations so concrete is thoroughly worked around reinforcement and other embedded items and into corners.
b. Maintain reinforcement in position on chairs during concrete placement.
c. Screed slab surfaces with a straightedge and strike off to correct elevations.
d. Slope surfaces uniformly to drains where required.
e. Begin initial floating using bull floats or darbies to form a uniform and open-textured surface plane, before excess bleedwater appears on the surface. Do not further disturb slab surfaces before starting finishing operations.

6. Cold-Weather Placement: Comply with ACI 306.1 and as follows. Protect concrete work from physical damage or reduced strength that could be caused by frost, freezing actions, or low temperatures.

   a. When average high and low temperature is expected to fall below 40 degrees Fahrenheit for 3 successive days, maintain delivered concrete mixture temperature within the temperature range required by ACI 301.

   b. Do not use frozen materials or materials containing ice or snow. Do not place concrete on frozen subgrade or on subgrade containing frozen materials.

   c. Do not use calcium chloride, salt, or other materials containing antifreeze agents or chemical accelerators unless otherwise specified and approved in mixture designs.

7. Hot-Weather Placement: Comply with ACI 305.1 and as follows:

   a. Maintain concrete temperature below 95 degrees Fahrenheit at time of placement. Chilled mixing water or chopped ice may be used to control temperature, provided water equivalent of ice is calculated to total amount of mixing water. Using liquid nitrogen to cool concrete is Contractor's option.

   b. Fog-spray forms, steel reinforcement, and subgrade just before placing concrete. Keep subgrade uniformly moist without standing water, soft spots, or dry areas.

J. Finishing Formed Surfaces

1. Rough-Formed Finish: As-cast concrete texture imparted by form-facing material with tie holes and defects repaired and patched. Remove fins and other projections that exceed specified limits on formed-surface irregularities.

   a. Apply to concrete surfaces not exposed to public view.

2. Related Unformed Surfaces: At tops of walls, horizontal offsets, and similar unformed surfaces adjacent to formed surfaces, strike off smooth and finish with a texture matching adjacent formed surfaces. Continue final surface treatment of formed surfaces uniformly across adjacent unformed surfaces, unless otherwise indicated.

K. Miscellaneous Concrete Items

1. Filling In: Fill in holes and openings left in concrete structures, unless otherwise indicated, after work of other trades is in place. Mix, place, and cure concrete, as specified, to blend with in-place construction. Provide other miscellaneous concrete filling indicated or required to complete the Work.

2. Curbs: Provide monolithic finish to interior curbs by stripping forms while concrete is still green and by steel-troweling surfaces to a hard, dense finish with corners, intersections, and terminations slightly rounded

3. Equipment Bases and Foundations: Provide machine and equipment bases and foundations as shown on Drawings. Set anchor bolts for machines and equipment at correct elevations, complying with diagrams or templates from manufacturer furnishing machines and equipment.

   a. Housekeeping pads: Normal weight concrete (3000 psi), reinforced with #3@16 inches on center set at middepth of pad. Trowel concrete to a dense, smooth finish. Set anchor bolts for securing mechanical or electrical equipment during pouring of concrete fill.

4. Protective slabs ("Mud slabs"): Normal weight concrete (2500 psi minimum) with a minimum thickness of 3-1/2 inches. Finish slab to a wood float finish.

L. Concrete Protecting and Curing

1. General: Protect freshly placed concrete from premature drying and excessive cold or hot temperatures. Comply with ACI 306.1 for cold-weather protection and ACI 305.1 for hot-weather protection during curing.

2. Formed Surfaces: Cure formed concrete surfaces, including underside of beams, supported slabs, and other similar surfaces. If forms remain during curing period, moist cure after loosening forms. If removing forms before end of curing period, continue curing for the remainder of the curing period.

3. Unformed Surfaces: Begin curing immediately after finishing concrete. Cure unformed surfaces, including floors and slabs, concrete floor toppings, and other surfaces.

4. Cure concrete according to ACI 308.1, by 1 or a combination of the following methods:

   a. Moisture Curing: Keep surfaces continuously moist for not less than 7 days with the following materials:

      1) Water
      2) Continuous water-fog spray
      3) Absorptive cover, water saturated, and kept continuously wet. Cover concrete surfaces and edges with 12-inch lap over adjacent absorptive covers

   b. Moisture-Retaining-Cover Curing: Cover concrete surfaces with moisture-retaining cover for curing concrete, placed in widest practicable width, with sides and ends lapped at least 12 inches, and sealed by waterproof tape or adhesive. Cure for not less than 7 days. Immediately repair any holes or tears during curing period using cover material and waterproof tape.

      1) Moisture cure or use moisture-retaining covers to cure concrete surfaces to receive floor coverings.
      2) Moisture cure or use moisture-retaining covers to cure concrete surfaces to receive penetrating liquid floor treatments.
      3) Cure concrete surfaces to receive floor coverings with either a moisture-retaining cover or a curing compound that the manufacturer certifies will not interfere with bonding of floor covering used on Project.

c. Curing Compound: Apply uniformly in continuous operation by power spray or roller according to manufacturer's written instructions. Recoat areas subjected to heavy rainfall within 3 hours after initial application. Maintain continuity of coating and repair damage during curing period.

3.2 REPAIR

A. Concrete Surface Repairs

1. Defective Concrete: Repair and patch defective areas when approved by Engineer. Remove and replace concrete that cannot be repaired and patched to Engineer's approval.

2. Patching Mortar: Mix dry-pack patching mortar, consisting of 1 part portland cement to 2-1/2 parts fine aggregate passing a No. 16 sieve, using only enough water for handling and placing.

3. Repairing Formed Surfaces: Surface defects include color and texture irregularities, cracks, spalls, air bubbles, honeycombs, rock pockets, fins and other projections on the surface, and stains and other discolorations that cannot be removed by cleaning.

   a. Immediately after form removal, cut-out honeycombs, rock pockets, and voids more than 1/2 inch in any dimension in solid concrete, but not less than 1 inch in depth. Make edges of cuts perpendicular to concrete surface. Clean, dampen with water, and brush-coat holes and voids with bonding agent. Fill and compact with patching mortar before bonding agent has dried. Fill form-tie voids with patching mortar or cone plugs secured in place with bonding agent.

   b. Repair defects on surfaces exposed to view by blending white portland cement and standard portland cement so that, when dry, patching mortar will match surrounding color. Patch a test area at inconspicuous locations to verify mixture and color match before proceeding with patching. Compact mortar in place and strike off slightly higher than surrounding surface.

   c. Repair defects on concealed formed surfaces that affect concrete's durability and structural performance as determined by Engineer.

4. Repairing Unformed Surfaces: Test unformed surfaces, such as floors and slabs, for finish and verify surface tolerances specified for each surface. Correct low and high areas. Test surfaces sloped to drain for trueness of slope and smoothness; use a sloped template.

   a. Repair finished surfaces containing defects. Surface defects include spalls, pop outs, honeycombs, rock pockets, crazing and cracks in excess of 0.01 inch wide or that penetrate to reinforcement or completely through unreinforced sections regardless of width, and other objectionable conditions.

   b. After concrete has cured at least 14 days, correct high areas by grinding.

   c. Correct localized low areas during or immediately after completing surface finishing operations by cutting out low areas and replacing with patching mortar. Finish repaired areas to blend into adjacent concrete.

d. Repair defective areas, except random cracks and single holes 1 inch or less in diameter, by cutting out and replacing with fresh concrete. Remove defective areas with clean, square cuts and expose steel reinforcement with at least a 3/4-inch clearance all around. Dampen concrete surfaces in contact with patching concrete and apply bonding agent. Mix patching concrete of same materials and mixture as original concrete except without coarse aggregate. Place, compact, and finish to blend with adjacent finished concrete. Cure in same manner as adjacent concrete.

e. Repair random cracks and single holes 1 inch or less in diameter with patching mortar. Groove top of cracks and cut out holes to sound concrete and clean off dust, dirt, and loose particles. Dampen cleaned concrete surfaces and apply bonding agent. Place patching mortar before bonding agent has dried. Compact patching mortar and finish to match adjacent concrete. Keep patched area continuously moist for at least 72 hours.

5. Perform structural repairs of concrete, subject to Engineer's approval, using epoxy adhesive and patching mortar.

6. Repair materials and installation not specified above may be used, subject to Engineer's approval.

3.3 FIELD QUALITY CONTROL

A. Tests by the Contractor

1. Contractor shall perform quality control testing as required to verify Work is in compliance with the Contract Documents.

B. Testing and Inspecting by Owner: Owner will engage a special inspector and qualified testing and inspecting agency to perform field tests and inspections and prepare test reports.

C. Inspections

1. Steel reinforcement placement
2. Headed bolts and studs
3. Verification of use of required design mixture
4. Concrete placement, including conveying and depositing
5. Curing procedures and maintenance of curing temperature
6. Verification of concrete strength before removal of shores and forms from beams and slabs

D. Concrete Tests: Perform testing of composite samples of fresh concrete obtained according to ASTM C172 according to the following requirements:

1. Testing Frequency: Obtain 1 composite sample for each day's pour of each concrete mixture exceeding 5 cubic yard, but less than 25 cubic yard, plus 1 set for each additional 50 cubic yard or fraction thereof.
2. Slump: ASTM C143; 1 test at point of placement for each composite sample, but not less than 1 test for each day's pour of each concrete mixture. Perform additional tests when concrete consistency appears to change.

3. Air Content: ASTM C231, pressure method, for normal-weight concrete; 1 test for each composite sample, but not less than 1 test for each day's pour of each concrete mixture.

4. Concrete Temperature: ASTM C1064; 1 test hourly when air temperature is 40 degrees Fahrenheit and below and when 80 degrees Fahrenheit and above, and 1 test for each composite sample.

5. Compression Test Specimens: ASTM C31.

   a. Cast and laboratory cure 4 cylinders for each composite sample.

      1) Do not transport field cast cylinders until they have cured for a minimum of 24 hours.

6. Compressive-Strength Tests: ASTM C39;

   a. Test 1 cylinder at 7 days.
   b. Test 2 cylinders at 28 days.
   c. Hold 1 cylinder for testing at 56 days as needed.

7. When strength of field-cured cylinders is less than 85 percent of companion laboratory-cured cylinders, evaluate operations and provide corrective procedures for protecting and curing in-place concrete.

8. Strength of each concrete mixture will be satisfactory if every average of any 3 consecutive compressive-strength tests equals or exceeds specified compressive strength and no compressive-strength test value falls below specified compressive strength by more than 500 psi.

9. Report test results in writing to Engineer, concrete manufacturer, and Contractor within 48 hours of testing. Reports of compressive-strength tests shall contain Project identification name and number, date of concrete placement, name of concrete testing and inspecting agency, location of concrete batch in Work, design compressive strength at 28 days, concrete mixture proportions and materials, compressive breaking strength, and type of break for both 7- and 28-day tests.

10. Additional Tests: Testing and inspecting agency shall make additional tests of concrete when test results indicate that slump, air entrainment, compressive strengths, or other requirements have not been met, as directed by Engineer. Testing and inspecting agency may conduct tests to determine adequacy of concrete by cored cylinders complying with ASTM C42 or by other methods as directed by Engineer.

    a. When the strength level of the concrete for any portion of the structure, as indicated by cylinder tests, falls below the specified requirements, provide improved curing conditions and/or adjustments to the mix design as required to obtain the required strength. If the average strength of the laboratory control cylinders falls so low as to be deemed unacceptable, follow the core test procedure set forth in ACI 301, Chapter 17. Locations of core tests shall be approved by the Engineer. Core sampling and testing shall be at Contractors expense.

    b. If the results of the core tests indicate that the strength of the structure is inadequate, any replacement, load testing, or strengthening as may be ordered by the Engineer shall be provided by the Contractor without cost to the Owner.

11. Additional testing and inspecting, at Contractor's expense, will be performed to determine compliance of replaced or additional work with specified requirements.

12. Correct deficiencies in the Work that test reports and inspections indicate does not comply with the Contract Documents.

E. Measure floor and slab flatness and levelness according to ASTM E1155 within 48 hours of finishing.

F. Concrete Finish Measurement and Tolerances

1. All floors are subject to measurement for flatness and levelness and comply with the following:

   a. Slabs shall be flat within a tolerance of 5/16 inches in 10 feet when tested with a 10 foot long straightedge. Apply straightedge to the slab at 3 foot intervals in both directions, lapping straightedge 3 feet on areas previously checked. Low spots shall not exceed the above dimension anywhere along the straightedge. Flatness shall be checked the next work day after finishing.

   b. Slabs shall be level within a tolerance of ± 1/4 inch in 10 feet, not to exceed 3/4 inches total variation, anywhere on the floor, from elevations indicated on the Drawings. Levelness shall be checked on a 10 foot grid using a level after removal of forms.

   c. Measurement Standard: All floors are subject to measurement for flatness and levelness, according to ASTM E1155.

2. 2 Tiered Measurement Standard

   a. Each floor test section and the overall floor area shall conform to the 2-tiered measurement standard as specified herein.

      1) Minimum Local Value: The minimum local FF/FL values represent the absolute minimum surface profile that will be acceptable for any 1 test sample (line of measurements) anywhere within the test area.

      2) Specified Overall Value: The specified overall FF/FL values represent the minimum values acceptable for individual floor sections as well as the floor as a whole.

3. Floor Test Sections

   a. A floor test section is defined as the smaller of the following areas:

      1) The area bounded by column and/or wall lines
      2) The area bounded by construction and/or control joint lines
      3) Any combination of column lines and/or control joint lines

   b. Test sample measurement lines within each test section shall be multidirectional along 2 orthogonal lines, as defined by ASTM E1155, at a spacing to be determined by the Engineer.

   c. The precise layout of each test section shall be determined by the Engineer.

4. Concrete Floor Finish Tolerance

a. The following values apply before removal of shores. Levelness values (FL) do not apply to intentionally sloped or cambered areas, nor to slabs poured on metal deck or precast concrete.

1) Slabs

Overall Value	FF45/FL30
Minimum Local Value	FF30/FL20

5. Floor Elevation Tolerance Envelope

a. The acceptable tolerance envelope for absolute elevation of any point on the slab surface, with respect to the elevation shown on the Drawings, is as follows:

1) Slab-on-Grade Construction: ± ¾ inch
2) Top surfaces of formed slabs measured prior to removal of supporting shores: ± ¾ inch
3) Top surfaces of all other slabs: ± ¾ inch
4) Slabs specified to slope shall have a tolerance from the specified slope of 3/8 inch in 10 feet at any point, up to ¾ inch from theoretical elevation at any point.

G. Testing by the Owner does not relieve the Contractor's responsibility to complete the Work in accordance with the Contract Documents and passing tests shall not be considered acceptance by the Owner.

3.4 CLEANING

A. Defective Work

1. Imperfect or damaged work or any material damaged or determined to be defective before final completion and acceptance of the entire job shall be satisfactorily replaced at the Contractor's expense, and in conformity with all of the requirements of the Drawings and Specifications.

2. Perform removal and replacement of concrete work in such manner as not to impair the appearance or strength of the structure in any way.

B. Cleaning

1. Upon completion of the work remove from the site all forms, equipment, protective coverings and any rubbish resulting therefrom.

2. After sweeping floors, wash floors with clean water.

3. Leave finished concrete surfaces in a clean condition, satisfactory to the Owner.

END OF SECTION

SECTION 09 90 00

PAINTING AND COATING

PART 1 GENERAL

1.1 SCOPE OF WORK

A. Work under this Section includes but is not limited to painting of plaster, wood, metal, masonry, concrete and other surfaces designated to be painted.

1.2 SUBMITTALS

A. Manufacturer's data sheets showing the following information:

1. Percent solids by volume.
2. Minimum and maximum recommended dry-film thickness per coat for prime, intermediate, and finish coats.
3. Recommended surface preparation.
4. Recommended thinners.
5. Statement verifying that the specified prime coat is recommended by the manufacturer for use with the specified intermediate and finish coats.
6. Application instructions including recommended equipment and temperature limitations.
7. Curing requirements and instructions.

B. Color charts, and samples if requested.

1.3 REFERENCE STANDARDS

A. Reference standards and recommended practices referred to in this Specification Section shall be the latest revision of any such document in effect at the bid time. The following documents are a part of this Section.

B. American Society for Testing and Materials (ASTM)

1. ASTM A780—Standard Practice for Repair of Damaged and Uncoated Areas of Hot-Dip Galvanized Coatings.
2. ASTM D520—Standard Specification for Zinc Dust Pigment.
3. ASTM D522—Standard Test Methods for Mandrel Bend Test of Attached Organic Coatings.
4. ASTM D1002—Standard Test Method for Apparent Shear Strength of Single-Lap-Joint Adhesively Bonded Metal Specimens by Tension Loading (Metal-to-Metal).
5. ASTM D3734—Standard Specification for High-Flash Aromatic Naphtha's.
6. ASTM D2697—Standard Test Method for Volume Nonvolatile Matter in Clear or Pigmented Coatings.
7. ASTM D4060—Standard Test Method for Abrasion Resistance of Organic Coatings by

the Taber Abrasion Method.

8. ASTM D4138—Standard Practices for Measurement of Dry Film Thickness of Protective Coating Systems by Destructive, Cross-Sectioning Means.
9. ASTM D4258—Standard Practice for Surface Cleaning Concrete for Coating.
10. ASTM D4260—Standard Practice for Liquid and Gelled Acid Etching of Concrete.
11. ASTM D4261—Standard Practice for Surface Cleaning Concrete Unit Masonry for Coating.
12. ASTM D4263—Standard Test Method for Indicating Moisture in Concrete by the Plastic Sheet Method.
13. ASTM D4787—Standard Practice for Continuity Verification of Liquid or Sheet Linings Applied to Concrete Substrates.
14. ASTM D6386—Standard Practice for Preparation of Zinc (Hot-Dip Galvanized) Coated Iron and Steel Product and Hardware Surfaces for Painting.
15. ASTM D7091—Standard Practice for Nondestructive Measurement of Dry Film Thickness of Nonmagnetic Coatings Applied to Ferrous Metals and Nonmagnetic, Nonconductive Coatings Applied to Non-Ferrous Metals.
16. ASTM E84—Standard Test Method for Surface Burning Characteristics of Building Materials.

C. National Association of Corrosion Engineers International (NACE)

1. NACE SP0188—Discontinuity (Holiday) Testing of New Protective Coatings on Conductive Substrates.

D. Steel Structure Painting Council (SSPC)

1. SSPC PA-1—Shop, Field, and Maintenance Painting of Steel.
2. SSPC PA-2—Measurement of Dry Coating Thickness with Magnetic Gauges.
3. SSPC SP-1—Solvent Cleaning.
4. SSPC SP-2—Hand Tool Cleaning.
5. SSPC SP-3—Power Tool Cleaning.
6. SSPC SP-5—White Metal Blast Cleaning.
7. SSPC SP-6—Commercial Blast Cleaning.
8. SSPC SP-7—Brush-Off Blast Cleaning.
9. SSPC SP-10—Near-White Blast Cleaning.
10. SSPC SP-11—Power Tool Cleaning to Bare Metal.
11. SSPC SP-13—Surface Preparation of Concrete

E. U.S. Department of Defense

1. MIL-P-21035—Paint High Zinc Dust Content, Galvanizing Repair.

1.4 DELIVERY, STORAGE, AND HANDLING

A. All materials shall be delivered to the job in original sealed and labeled containers of the paint manufacturer. Labels shall show name of manufacturer, type of coating, formulation, color, and instructions for thinning.

PART 2 – PRODUCTS

2.1 GENERAL

A. Coatings in contact with Potable Water shall comply with requirements of the Safe Drinking Water Act and other applicable federal, state, and local requirements. Provide certification by manufacturer that components and materials comply with NSF/ANSI 61-2016 – Drinking Water Components.

2.2 MANUFACTURERS

A. Nationally recognized manufacturers of paints and protective coatings with products formulated specifically for wastewater treatment facilities, such as Tnemec, or equivalent Glidden and Sherwin-Williams products. This specification is prepared with reference to Tnemec products.

2.3 PAINTING AND COATING SYSTEMS

A. The following index lists painting and coating systems by service and generic type:

System No.	Generic Type	Surface Material	Finish	Typical Function
1	Epoxy/ Polyurethane	Ferrous Metal, Non-galvanized	Gloss	Exterior metals not subject to immersion or frequent splashing
2	Polyurethane	Ferrous Metal, Galvanized	Gloss	Exterior metals not subject to immersion or frequent splashing
3	Epoxy	Ferrous Metal, Non-galvanized	Semi-gloss	Interior metals not subject to immersion or frequent splashing or condensation
4	Alkyd	Ferrous Metal, Non-galvanized	Semi-gloss	Interior metals not subject to immersion or frequent splashing or condensation
5	Epoxy	Ferrous Metal, Non-galvanized	Semi-gloss	Interior metals subject to humidity and condensation
6	Epoxy	Ferrous Metal, Galvanized	Semi-gloss	Interior metals subject to Humidity and condensation
7	Epoxy	Ferrous Metal, Non-galvanized	Semi-gloss	Metals subject to immersion or frequent splashing
8	Epoxy	Ferrous Metal, Galvanized	Semi-gloss	Metals subject to immersion or frequent splashing

System No.	Generic Type	Surface Material	Finish	Typical Function
9	Epoxy	Concrete	Semi-gloss	Interior
10	Epoxy	Concrete	Tile-like gloss	Interior walls of washrooms
11	Acrylic	Concrete	Low sheen	Precast concrete ceilings, beams, columns
12	Elastomeric	Concrete	Low sheen	Exterior concrete
13	Epoxy	Masonry	Semi-gloss	Interior masonry
14	Epoxy	Masonry	Tile-like gloss	Interior walls of washrooms
15	Elastomeric	Masonry	Low sheen	Exterior masonry
16	Acrylic	Masonry	Low sheen	Interior masonry
17	Acrylic	Drywall, plaster	Low sheen	Interior drywall, plaster
18	Acrylic	Plaster, stucco	Low sheen	Exterior plaster, stucco
19	Alkyd	Wood	Gloss	Exterior wood
20	Alkyd	Wood	Semi-gloss	Exterior wood
21	Alkyd	Wood	Gloss	Interior wood
22	Alkyd	Wood	Semi-gloss	Interior wood
23	Acrylic	Wood	Low sheen	Interior wood
24	Acrylic	Canvas wrapped insulation	Semi-gloss	Canvas wrapped insulated piping
25	Coal Tar Epoxy	Ferrous Metal	Semi-gloss	Metals submerged in non-potable water
26	Coal Tar Epoxy	Concrete	Semi-gloss	Submerged concrete in non-potable water or below grade (Excluding concentrate tank interior)
27	Epoxy	Ferrous Metal	Semi-gloss	Metals submerged in potable water
28	Epoxy	Concrete	Semi-gloss	Concrete submerged in potable water
29	Acrylate	Concrete	Low Sheen	Exterior Concrete
30	Zinc Polyurethane	Steel, Ductile Iron	Low Sheen	Exterior Piping
31	Epoxy	Concrete	Semi-gloss	Submerged concrete in corrosive environment

System No.	Generic Type	Surface Material	Finish	Typical Function
32	Epoxy/Acrylic	PVC and FRP pipe	Semi-gloss	Exposed PVC and FRP pipe

2.4 COATING SCHEDULE

A. The following are the coating systems are required for this project:

Description	Application	System No.
Exterior Piping and Equipment	Non-Immersion	1
Submerged Piping and Fabrication	Immersion or subject to splashing	7
Cast-In-Place Concrete	Exterior	12
Cast-In-Place Concrete	Submerged or Wet	31
PVC and FRP Pipe	Exposed and Color Coded	32

No paint is required on hot-dipped galvanized steel, structural non-architectural aluminum, or stainless-steel fabrication.

2.5 COATING SYSTEMS

A. System No. 1

1. System No. 1 shall be used for exterior non-galvanized ferrous metals and steel fabrication which are not subject to immersion or frequent splashing of water, including the following:

   a. Exposed exterior piping.

   b. Steel storage tanks.

   c. Exterior cranes and hoists.

   d. Exterior mechanical equipment, pumps, miscellaneous metals, without a factory-applied final finish suitable for exterior applications.

2. Surface Preparation: SP 3, 6, and 7 as needed.

3. Shop Primer: One coat of Tnemec 37H-77 Chem-Prime Universal Primer to 2.5 mils dry thickness.

4. Field Touch-Up: Same material as Shop Primer.

5. Intermediate: Two (2) coats of:

   Tnemec Series 2H High-Build Tneme-Gloss at 1.5 mils dry thickness per coat.

6. Finish: One coat of Tnemec Series 72 Endura-Shield® to 2.5 mils dry thickness.

B. System No. 7

1. System No. 7 shall be used for non-galvanized, ferrous metals, piping, and fabrication subject to immersion or frequent splashing, including the following:

a. Submerged piping and piping subject to splashing.

b. Submersible pumps without a factory applied final finish suitable for immersion service.

c. Submerged fabricated steel, miscellaneous metal, process equipment, supplied without a factory-applied final finish suitable for immersion service.

2. Surface Preparation: SP 10, 5 as needed.

3. Shop or Field Primer: One coat of Tnemec Series 94-H2O Hydro-Zinc Primer to 3.0 mils dry thickness.

4. Field Touch-Up: Same material as shop primer.

5. Finish: Two (2) coats of Tnemec Series 66 Hi-Build Epoxoline® at 4.0 mils dry thickness per coat.

C. System No. 12

1. System No. 12 shall be used for exterior concrete and CMU surfaces requiring a matte finish.

2. Surface Preparation: SP 13

3. Filler (may be deleted if concrete has rubbed finish): One coat of Tnemec Series 54-562 Masonry Filler at 80 square feet per gallon.

4. Finish: Two (2) coats of Tnemec Series 6 Tneme-Cryl® at 2.5 mils dry thickness per coat.

D. System No. 31

1. System No. 31 shall be used for the influent flow channels, and interior concrete surfaces of the headworks structure, and wet or submerged concrete.

2. Surface Preparation: SP-13 after minimum 28 days concrete cure time followed by one coat of Tnemic Mortarclad™ Series 218 at minimum 1/16” thick.

3. Primer: One coat of Tnemec Series 20 Pota-Pox® to 4.0 mils dry thickness.

4. Finish Coat: One coat of Tnemec Epoxoline® Series 22 to 30.0 mils dry thickness.

E. System No. 32

1. System No. 32 shall be used to coat PVC and FRP piping where such pipe is above grade and exposed or in galleys and vaults where required for color coding.

2 Surface Preparation: SP 1 – solvent clean

3. Primer: One coat of Tnemec Series L69 Hi-Build Epoxoline® II to 2.5 mils dry thickness.

4. Finish Coat: One coat of Tnemec Series 1075 Endura Shield II® to 2.5 mils dry thickness.

PART 3 EXECUTION

3.1 MIXING

A. Exercise care to keep fire hazards to a minimum. Provide an approved hand fire extinguisher near each paint storage and mixing area. No oily waste, rags, or painting equipment shall be left scattered throughout the premises.

B. Mix coatings in accordance with manufacturer's instructions. Colors shall be thoroughly mixed with no streaks or separation of color. Do not add thinners, driers, or other additives except as recommended by the coating manufacturer. Do not incorporate in the coating any thinners or solvents used for cleaning brushes or equipment.

C. Protect all adjacent areas against damage and leave storage and mixing areas clean at the completion of painting.

3.2 ACCEPTANCE OF SURFACES

A. Inspect all surfaces and adjoining work and report to the Engineer in writing any existing unsatisfactory conditions. No painting work shall be started until the unsatisfactory conditions are remedied.

B. Commencement of surface preparation and painting shall constitute the acceptance of existing conditions and any defects appearing in the painting work thereafter shall be by the Contractor at no additional cost.

3.3 PROTECTION OF ADJACENT SURFACES

A. Provide necessary protection for completed work and all adjoining surfaces. Provide temporary closures as required to prevent circulation of dust from adjacent areas where other work is in progress. Where it is necessary to remove existing protection of work of others, such protection shall be fully replaced. It shall be the responsibility of the Contractor to locate and avoid damage to any and all existing water, gas, sewer, electric, telephone, and other utilities, structures, or appurtenances. The Contractor shall repair or pay for all damages caused by his operations or his personnel to existing utilities, structures, appurtenances, or properties, either below ground or above ground and shall settle in full all damage suites which may arise as a result of his operations.

3.4 VENTILATION

A. Provide adequate ventilation for safe application and for proper drying of coatings on interior surfaces. It is essential that the solvent vapors released during and after application of coatings be removed from tanks or enclosed places. During coating application in enclosed areas, the capacity of ventilating fans shall be at least 300 cfm per gallon of coating applied per hour. Continuous forced ventilation at a rate of at least one complete air change per 4 hours shall be provided for at least 7 days after coating application is completed. Air shall be exhausted from the lowest portions of tanks or enclosed spaces with the top openings kept open and clear.

3.5 SURFACE PREPARATION

A. General

1. Prepare all surfaces in accordance with the coating manufacturer's instructions and as specified. Surfaces shall be uniform texture, dry, and free from dust, grit, oil, grease, or any material which will adversely affect adhesion or appearance of the coating. Rough edges of metal, weld seams and sharp edges from scaffold lugs shall be ground smooth.
2. Surfaces that have been cleaned, pretreated, and/or otherwise prepared for painting shall be given a coat of the first-coat material as soon as practicable prior to any deterioration of the prepared surface.
3. Hardware, accessories, plates, fixtures, and similar items in contact with coated surfaces shall be removed, masked, or otherwise protected prior to surface preparation and painting operations.
4. Exposed nails and other ferrous metals on surfaces to be coated shall be spot- primed with a metal primer compatible with the finish.

B. Surface Preparation SP 3 - Power Tool Cleaning

1. Remove all oil and grease from surface. Power tool clean the surface removing all loose mill scale, loose rust, loose paint, and other detrimental foreign matter by the methods outlined in the SSPC SP 3. Feather out edges of chipped or abraded areas to prevent flaws from showing through finish coats.
2. The cleaned surface shall be primed as soon as possible and before any rusting of the surface occurs.

C. Surface Preparation SP 6 - Commercial Blast Cleaning

1. Remove all oil and grease from the surface. Blast clean surface to a Commercial Finish, removing mill scale, dirt, rust, and foreign matter by the methods outlined in SSPC SP 6. Two thirds of each square inch of surface area shall be free of all visible residues.
2. Blasting shall be done with centrifugal wheel or compressed air blast using either steel grit or flint silica sand. Abrasive should provide a profile depth of 1.0 to 2.0 mils. Steel Grit #G-80 or flint silica sand 20-50 mesh is recommended to obtain proper profile depth. Remove all dust and sand by vacuuming.
3. The blast cleaned surface shall be primed as soon as possible and before any rusting of the surface occurs.

D. Surface Preparation SP 7 - Brush-Off Blast

1. Prepare metal as outlined in SSPC SP 7 to provide for proper adhesion of coating.

E. Surface Preparation SP l0 - White Blast Cleaning

1. Steel surfaces shall be dry and clean. Remove all grease, oils and contaminants with rags soaked in toluol or xylol. Solvent Clean all surfaces per SSPC-SP 1 Solvent Cleaning.

2. Remove all weld spatter. Grind all rough welds and sharp edges to a smooth rounded contour. Blast clean the surface to a Near White Metal finish, removing nearly all mill scale, rust, rust-scale, paint or foreign matter by the recommended methods outlined in SSPC SP l0. At least 95 percent of each square inch shall be free of all visible residues and staining.
3. Blasting shall be done with centrifugal wheel or compressed air blast nozzles using either steel grit or flint silica sand. Abrasive should provide profile depth of l.0 to 2.0 mils. Steel Grit #G-80 or flint silica sand 20-50 mesh is recommended to obtain proper profile depth. Remove all dust and sand by vacuuming.
4. The blast cleaned surface should be primed as soon as possible and before any rusting of the surface occurs.

F. Surface Preparation SP C1 - General Cleaning

1. Allow concrete and masonry to cure in place for 28 days. Remove all dirt, dust, form oil, curing compounds, grease stains, or efflorescence from surfaces and roughen as required to provide good adhesion of coatings. If washing of the surface is required, use tri-sodium phosphate solution followed by a clean water rinse. Fill all minor holes to produce uniform surface textures.

G. Surface Preparation SP C2 - Sweep Sand Blasting

1. Concrete surfaces must be clean, dry, and free of existing coatings. Cure new concrete a minimum of 28 days. Fill and seal structural cracks and defects.
2. Concrete shall be cleaned and etched by sweep sandblasting (brush-off blast) so the surface is grainy to the touch. All dust or foreign matter shall be removed by vacuuming.

H. Surface Preparation SP C3 - Acid Etching (Horizontal Surfaces Only)

1. Concrete surfaces must be clean and dry. Cure new concrete a minimum of 28 days. Remove all dirt, dust, grease, oil, and other contaminants from surface.
2. Etch concrete surface with 15 to 20 percent muriatic acid. Thoroughly coat the concrete with solution applied with a mop or brush. When foaming stops, thoroughly neutralize with clear water to remove soluble salts. Test the rinse water with litmus paper to verify the neutralization.
3. After etching, the surface shall be "grainy" to the touch; if not, repeat the treatment.
4. Permit surface to thoroughly dry a minimum of 72 hours before coating.

I. Surface Preparation SP M1 - Solvent Cleaning

1. Non-ferrous and galvanized ferrous surfaces scheduled to receive paint shall be solvent cleaned to remove all oils, salts, and contaminants prior to application of pretreatments or primers.

J. Surface Preparation SP P1 - Drywall

1. Fill all surface irregularities with spackling compound and sand to a smooth level surface prior to applying finish. Care shall be exercised to avoid raising nap on the paper.

K. Surface Preparation SP P2 - Plaster and Stucco

1. Rake cracks, scratches, and abrasions deeply. Soak with water and fill with patching plaster or spackling compound. Treat with aqueous solution of zinc sulphate, 4 lbs. to l gallon of water. Add to solution enough phenolphthalein to act as a color warning of alkali. Allow to dry for 3 days. Remove loose crystals before coating.

L. Surface Preparation SP W1 - Wood

1. Sandpaper to a smooth even surface and vacuum or dust off. Treat all knots and sap spots with mineral spirits and, when dry, touch up with an approved sealer. Subsequent to priming and staining, thoroughly fill holes and cracks with plastic wood filler for transparent finishes and putty for painted wood. Unless otherwise approved, paint only when the moisture content of the wood is below 12 percent. Do not apply primer or sealer to wood in areas where cement, mortar, or plaster is not thoroughly dry.

3.6 APPLICATION

A. All work shall be performed by skilled painters. Surfaces shall be free of drops, ridges, waves, laps, and brush marks. Edges of paint adjoining other colors or materials shall be sharp and true.

B. Do not apply coatings in temperatures below 50 degrees F. except where the manufacturer allows lower temperatures. No exterior painting shall be done during inclement weather when relative humidity exceeds 85%, the ambient temperature is within 5 degrees F of the Dew Point or under conditions identified by the manufacturer as unsuitable.

C. The average rate of application shall not exceed the theoretical rate of coverage recommended by the coating manufacturer for the type of surface involved, less an allowance for losses. Average dry film thickness shall not be less than thickness set forth under Painting Systems. Not more than l0-20% of points inspected may be less than 90% of the specified thickness. Deficiencies shall be corrected by application of additional coating.

D. Each coat shall be uniform in coverage and color. Successive coats shall perceptibly vary in color. Each coat shall be carefully examined, and faulty material, poor workmanship, holidays, damaged areas, and other imperfections shall be touched up prior to applying succeeding coats. Comply with coating manufacturer's recommendations for drying time between coats.

E. Bottoms, sides, and edges of doors shall receive same finish as faces of doors. If refitting of wood doors is done prior to final acceptance, refinish at no extra cost.

F. Incidental niches, recesses, passages, closets, etc., shall be finished to match similar or adjacent spaces. Access doors, panels, convectors, grilles, and similar items shall be coated the same color as adjacent work, except for non-ferrous metal or where otherwise directed by the Engineer. Primed hardware shall be coated to match adjacent work to which they are attached.

G. In the event that the finished surfaces are not acceptable, completely refinish entire unit areas or sections as necessary in order to eliminate visible laps or other indications of repairs.

H. Mixing, thinning, pot life, application procedure, equipment, coverage, curing, re-coating, storage and number of coats shall be in accordance with coating manufacturer's instructions.

I. Avoid degradation and contamination of blasted surfaces and avoid between-coat contamination. Surfaces contaminated shall be cleaned before applying next coat. The method of cleaning contaminated surface shall be approved by the Engineer or the Owner's representative.

J. Each application of material shall be worked into corners, crevices, joints, etc., and distributed evenly over flat surfaces. Spraying techniques that result in a uniform wet pattern shall be used, and dry spraying should be avoided. Dry spray shall be removed prior to coating being applied.

K. All bolts, welds, sharp edges, and difficult access areas shall receive a primer brush coat or spray coat prior to primer spray application.

3.7 PIPE COLOR CODING

A. In accordance with Section 09 90 01, Piping Color Coding and Labeling.

3.8 CLEAN-UP

A. At completion of the painting work, clean off all paint spots and other paint materials from surfaces where they are not intended to be. Remove from the premises all rubbish and accumulated material and leave the work in clean, orderly condition, acceptable to the Engineer. All cloths and waste that might constitute a fire hazard shall be placed in closed metal containers or destroyed at the end of each day. Upon completion of the work, all staging, scaffolding, and containers shall be removed from the site and/or destroyed in an approved and legal manner.

3.9 DAMAGED COATINGS

A. Damaged coatings, pinholes, and holidays shall have edges feathered and repaired in accordance with the recommendations of the manufacturer, as approved by the Engineer.

B. All finish coats, including touch up and damage-repair coats shall be applied in a manner which will present a uniform texture and color-match appearance.

3.10 UNSATISFACTORY APPLICATION

A. If the item has an improper finish, color, or insufficient film thickness, the surface shall be cleaned and top coated with the specified material to obtain the specified color and coverage. Specific surface preparation information to be secured from the coatings manufacturer and the Engineer.

B. All visible areas of chipped, peeled, or abraded paint shall be hand or power-sanded, feathering the edges. The areas shall then be primed and finish-coated in accordance with the specifications.

C. Work shall be free of runs, bridges, shiners, laps, or other imperfections. Evidence of these conditions shall be cause for rejection.

D. Any defects in the coating system shall be repaired by the Contractor per the written recommendations of the coating manufacturer.

E. Any repairs made on steel surfaces for immersion service shall be holiday detected in accordance with ASTM G 62 low-voltage holiday detection. Areas found to have holidays shall be marked and repaired in accordance with the paint manufacturer's instructions. The Engineer shall be notified of time of testing so that he might be present to witness testing.

3.11 Guarantee and Anniversary Inspection

A. All work shall be warranted for a period of one year from date of acceptance of the project.

B. The Owner will notify the Contractor at least 30 days prior to the anniversary date and shall establish a date for the inspection. Any defects in the coating system shall be repaired by the Contractor at no additional cost to the Owner. Should a failure occur to 25% of the painted surface, either interior or exterior, the entire surface shall be cleaned and painted in accordance with these specifications.

END OF SECTION

SECTION 09 90 10

PIPING SYSTEM COLOR CODING AND LABELING

PART 1 GENERAL

1.1 SCOPE OF WORK

A. Equipment and all above ground piping 3/4" and greater shall be coated per Section 099000 and tinted in the specific color scheme to denote the product conveyed within the piping.

1. Stainless steel, brass, bronze, and copper piping shall not be painted but shall be labeled.
2. All manufacturer installed labels, identification and specification plates shall be protected and not covered with paint including adhesive type labels.

B. Piping shall by labeled with the appropriately sized lettering with vinyl labels for the fluid or gas conveyed within the piping.

C. All piping shall be labeled with appropriate size vinyl labels showing directional arrow for flow. A band that encircles the piping at the point of application should be applied

D. Application of Vinyl Labeling of systems and directional arrows shall be placed according to ANSI/ASME A 13.1.

E. Stainless steel, brass, bronze, and copper piping that is not painted shall be supplied with appropriately sized vinyl labeling for product conveyed and directional arrows.

1.2 REFERENCE STANDARDS

A. ANSI/ASME A 13.1

B. Section 099000 - Painting and Coating Specification

PART 2 PRODUCTS (NOT USED)

PART 3 EXECUTION

3.1 PIPING COLOR CODE

A. To facilitate identification of piping in plants and pumping stations it is recommended that the following color scheme be utilized:

1. Water Lines
   a. Raw or Recycle - Olive Green
   b. Settled or Clarified – Aqua
   c. Finished or Potable - Dark Blue
2. Chemical Lines
   a. Alum or Primary Coagulant – Orange
   b. Ammonia – White
   c. Carbon Slurry - Black

d. Caustic - Yellow with Green Band
e. Chlorine (Gas and Solution) – Yellow
f. Chlorine Dioxide - Yellow with Violet Band
g. Fluoride - Light Blue with Red Band
h. Lime Slurry - Light Green
i. Ozone - Yellow with Orange Band
j. Phosphate Compounds - Light Green with Red Band
k. Polymers or Coagulant Aids - Orange with Green Band
l. Potassium Permanganate – Violet
m. Soda Ash - Light Green with Orange Band
n. Sulfuric Acid - Yellow with Red Band
o. Sulfur Dioxide - Light Green with Yellow Band
p. Carbon Dioxide – Green with White Band

3. Waste Lines
   a. Backwash Waste - Light Brown
   b. Sludge - Dark Brown
   c. Reclaimed Water - Purple
   d. Sewer (Sanitary or Other) - Dark Gray
4. Other
   a. Compressed Air - Dark Green
   b. Gas - Red
   c. Other Lines - Light Gray
5. For liquids or gases not listed above, a unique color scheme and labeling should be used. In situations where two colors do not have sufficient contrast to easily differentiate between them, a six-inch band of contrasting color should be on one of the pipes at approximately 30-inch intervals. The name of the liquid or gas should also be on the pipe. Where applicable provide arrows indicating the direction of flow.
   a. Submit color charts for review and approval of the Engineer and Owner

3.2 SYSTEM AND DIRECTIONAL ARROW LABELING

A. Follow the recommendations of ANSI/ASME A 13.1 for Pipe Markers Pipe Labeling and Marking Standards.

B. In the case where ANSI/AMSE A 13.1 differs from utility standards, confirm the specified color and labeling standard to use with the Engineer and Owner.

3.3 PIPE MARKER VISIBILITY, SIZE AND PLACEMENT REQUIREMENTS

A. Markers shall be located so that they are readily visible to plant personnel from the point of normal approach.

B. Label Size vs. Pipe Size

1. Labeling shall be sized according to the diameter of the pipe.

Outside Diameter of Pipe or Covering	Length of Color Field	Letter Height
3/4 in - 1 1/4 in (19-32 mm)	5 in (127 mm)	1/2 in (13 mm)
1 1/2 in - 2 in (38-51 mm)	8 in (203 mm)	3/4 in (19 mm)
2 1/2 in - 6 in (64-152 mm)	12 in (304 mm)	1 1/4 in (32 mm)
8 in - 10 in (203-254 mm)	24 in (609 mm)	2 1/2 in (64 mm)
10 in (254 mm) or bigger	32 in (812 mm)	3 1/2 in (89 mm)

a. Selection of size chart.

2. Labels shall be provided as follows:

a. Mark pipes adjacent to all valves and flanges.

b. Mark pipes at both sides of floors and walls.

c. For direction changes and fittings mark direction at each change in direction;

d. Mark pipes in equal spaces not greater than 8 ft intervals on straight runs.

i. In the case where length is less than 8 feet, place on marker in the center of the distance.

3. Where piping is less than ¾" diameter or space is insufficient to place labeling, a Brass or other resilient tag shall be sufficient to identify the system. Examples for the use of tags would include:

a. Control Valves

b. Injection Points/quills

4. Tags used for system Labeling should include the stamped information of the system as well as any specific information such as valve title, equipment designation ("injection quill", for example) and directional designation (for example, Inlet, Outlet, Injection Point, Isolation, etc.)

C. Flow Direction Arrows

1. All Arrows showing direction of flow shall conform to the size and color scheme for the piping labeling scheme of the conveyed fluid/gas of the piping.
2. Direction of Flow Arrows shall be placed adjacent (within 2 inches either before or after) of the Label and should encircle the pipe.
3. In the case where a system label is adjacent, but inadequate space is provided to place flow arrows due to change of direction or other hindrance, directional arrow should be placed as close to the label as possible except where the piping originates or terminates to tanks or equipment.

END OF SECTION

SECTION 31 25 00

EROSION AND SEDIMENTATION CONTROLS

PART 1 GENERAL

1.1 SUMMARY

A. Section includes requirements for furnishing and installing erosion and sedimentation controls.

1.2 REFERENCES

A. American Association of State Highway and Transportation Officials:

1. AASHTO T88 - Standard Specification for Particle Size Analysis of Soils.
2. AASHTO T180 - Standard Specification for Moisture-Density Relations of Soils Using a 4.54-kg (10-lb) Rammer and a 457-mm (18-in.) Drop.

B. American Concrete Institute:

1. ACI 301 - Specifications for Structural Concrete.

C. ASTM International:

1. ASTM C127 - Standard Test Method for Density, Relative Density (Specific Gravity), and Absorption of Coarse Aggregate.
2. ASTM D698 - Standard Test Method for Laboratory Compaction Characteristics of Soil Using Standard Effort (12,400 ft-lbf/ft3).
3. ASTM D1557 - Standard Test Methods for Laboratory Compaction Characteristics of Soil Using Modified Effort (56,000 ft-lbf/ft3).
4. ASTM D2922 - Standard Test Method for Density of Soil and Soil-Aggregate in Place by Nuclear Methods (Shallow Depth).
5. ASTM D3017 - Standard Test Method for Water Content of Soil and Rock in Place by Nuclear Methods (Shallow Depth).

1.3 SUBMITTALS

A. Section 01 33 00 - Submittals

B. Product Data: Submit data on geotextile.

C. Samples:

1. Submit two samples or rock, minimum 5 tons each or one-half total project quantity, whichever is smaller. Provide one sample in place at construction site and provide other sample at quarry. Construction site sample may be incorporated into the Work. Samples will be used as reference for judging size, and graduation of rock supplied and placed.

D. Test Reports: Indicate certified tests results for precast concrete at manufacturing facility, cast-in-place concrete in field, and granular backfill.

E. Manufacturer's Certificate: Certify Products meet or exceed specified requirements.

1.4 CLOSEOUT SUBMITTALS

A. In accordance with Section 01 71 19, Closeout Requirements

1.5 QUALITY ASSURANCE

A. Perform Work according to Florida Department of Transportation and Florida Department of Environmental Protection standards.

1.6 PRE-CONSTRUCTION MEETINGS

A. Refer to Section 00 C-700, Standard General Conditions.

1.7 ENVIRONMENTAL REQUIREMENTS

A. Refer to Division 01 Sections regarding, Product Requirements

B. Do not place grout when air temperature is below freezing.

C. Do not place concrete when base surface temperature is less than 40 degrees F, or surface is wet or frozen.

PART 2 PRODUCTS

2.1 ROCK AND GEOTEXTILE MATERIALS

A. Furnish rock and geotextile materials according to Florida Department of Transportation Standard Specifications for Road and Bridge Construction.

2.2 CONCRETE MATERIALS AND REINFORCEMENT

A. Furnish cement, aggregate, admixtures, and reinforcement in per Florida Department of Transportation Standard Specifications for Road and Bridge Construction.

B. Water: Clean and not detrimental to concrete.

2.3 BLOCK, STONE, AGGREGATE, AND SOIL MATERIALS

A. Furnish block, stone, aggregate, and soil materials according to Florida Department of Transportation Standard Specifications for Road and Bridge Construction.

2.4 PLANTING MATERIALS

A. Seeding, Soil Supplements, and Mulch: Furnish according to Florida Department of Transportation standards.

2.5 PIPE MATERIALS

A. Pipe: Furnish according to Florida Department of Transportation standards.

2.6 ACCESSORIES

A. Furnish the following accessories in accordance with Florida Department of Transportation standards:

1. Joint Sealers.
2. Joint Fillers.
3. Building Paper.
4. Grout.
5. Steel Plate Vortex Device.
6. Welding Material.
7. Anti-Seep Collar.
8. Trash Racks.

2.7 MIXES

A. Concrete: Furnish according to Florida Department of Transportation standards.

2.8 SOURCE QUALITY CONTROL (AND TESTS)

A. Division 01 sections regarding Testing and Inspection Services: Testing, inspection, and analysis requirements.

B. Perform tests on cement, aggregates, and mixes to ensure conformance with specified requirements.

C. Test samples in accordance with ACI 301.

D. Make rock available for inspection at producer's facility prior to shipment. Notify Engineer at least seven days before inspection is allowed.

E. Allow witnessing of inspections and test at manufacturer's test facility. Notify Engineer at least seven days before inspections and tests are scheduled.

PART 3 EXECUTION

3.1 EXAMINATION

A. Division 01 Sections regarding Modifications to Existing Structures, Piping, and Equipment for verification of existing conditions before starting work.

B. Verify compacted material is acceptable and ready to support devices and imposed loads.

C. Verify gradients and elevations of base or foundation for other work are correct.

3.2 INSTALLATION OF EROSION AND SEDIMENT CONTROLS

A. All erosion and sediment controls shall be installed as shown and in accordance with Florida Department of Transportation Standard Specifications for Road and Bridge Construction.

3.3 SITE STABILIZATION

A. Incorporate erosion control devices indicated on the Drawings into the Project at the earliest practicable time.

B. Construct, stabilize, and activate erosion controls before site disturbance within tributary areas of those controls.

C. Stockpile and waste pile heights shall not exceed 35 feet. Slope stockpile sides at 2: 1 or flatter.

D. Stabilize any disturbed area of affected erosion control devices on which activity has ceased and which will remain exposed for more than 20 days.

1. During non-germinating periods, apply mulch at recommended rates.
2. Stabilize disturbed areas which are not at finished grade and which will be disturbed within one year with temporary seeding.
3. Stabilize disturbed areas which are either at finished grade or will not be disturbed within one year with permanent seeding and/or sodding as shown and specified.

E. Stabilize diversion channels, sediment traps, and stockpiles immediately.

3.4 FIELD QUALITY CONTROL

A. Inspect erosion control devices on a weekly basis and after each runoff event. Make necessary repairs to ensure erosion and sediment controls are in good working order.

B. Field test concrete in accordance with Florida Department of Transportation standards.

C. Compaction Testing: As specified in Section 33 05 10 – Utility Trench Excavation, Embedment, and Backfill.

D. When tests indicate Work does not meet specified requirements, remove Work, replace, and retest.

E. Frequency of Compaction Testing: As specified in Section 33 05 10 – Utility Trench Excavation, Embedment, and Backfill.

3.5 CLEANING

A. Division 01 Section regarding Cleaning for cleaning requirements.

B. When sediment accumulation in sedimentation structures has reached a point one-third depth of sediment structure or device, remove and dispose of sediment.

C. Do not damage structure or device during cleaning operations.

D. Do not permit sediment to erode into construction or site areas or natural waterways.

E. Clean channels when depth of sediment reaches approximately one-half channel depth.

3.6 PROTECTION

A. Division 01 Section regarding Product Storage and Handling Requirements for protecting finished Work.

B. Immediately after placement, protect paving from premature drying, excessive hot or cold temperatures, and mechanical injury.

C. Do not permit construction traffic over paving until 75 percent design strength of concrete has been achieved.

D. Protect paving from elements, flowing water, or other disturbance until curing is completed.

END OF SECTION

[THIS PAGE INTENTIONALLY LEFT BLANK]

SECTION 32 92 00

SEEDING AND SODDING

PART 1 GENERAL

1.1 SCOPE OF WORK

A. The Contractor shall provide all materials, equipment, labor, and work to construct the project in accordance with the Contract Documents. No time extensions shall be given to the Contractor for not establishing a grass or sod cover during the "proper" planting season.

B. This work includes but is not limited to the following items specified in this Section:

1. Placing sod to provide grass as finished ground cover at all unpaved disturbed areas of the site shall be as indicated on the Contract Drawings.
2. Placing seed to provide grass as finished ground cover in areas (not designated to be sodded) that were disturbed by the work. Provide seed and topsoil for all areas not designated to be sodded that have been disturbed or are indicated on the Contract Drawings to be seeded.

1.2 SUBMITTALS

A. The Contractor shall submit shop drawings in accordance with applicable Division 01 Sections regarding Submittals and Acceptance.

PART 2 REFERENCE STANDARDS

Reference standards and recommended practices referred to in this Specification Section shall be the latest revision of any such document in effect at the bid time. The following documents are a part of this Section. Where this Section differs from these documents, the requirements of this Section shall apply.

A. Florida Department of Transportation (FDOT) Standard Specifications for Road and Bridge Construction, 2010:

1. FDOT Section 162 Prepared Soil Layer
2. FDOT Section 570 Performance Turf
3. FDOT Section 981 Turf Materials
4. FDOT Section 982 Fertilizer
5. FDOT Section 983 Water for Grassing

2.2 WARRANTIES

A. Warranties shall be in accordance with applicable Division 01 sections.

2.3 DELIVERY, STORAGE, AND HANDLING

A. The Contractor shall adhere to the requirements specified applicable Division 01 Sections regarding Product Delivery, Storage, and Handling Requirements.

B. Deliver, store, protect, and handle products to the site to prevent damage from wetness and weather conditions.

C. Deliver grass seed mixture in sealed containers. Seed in damaged packaging is not acceptable.

D. Deliver fertilizer in waterproof bags showing weight, chemical analysis, and name of the manufacturer.

2.4 MAINTENANCE

A. Maintenance shall be as indicated under Part 3, Execution, of this Specification Section.

2.5 DEFINITIONS

A. Weeds: Weeds include but are not limited to Dandelion, Jimsonweed, Quackgrass, Horsetail, Morning Glory, Rush Grass, Mustard, Lambsquarter, Chickweed, Cress, Crabgrass, Canadian Thistle, Nutgrass, Poison Oak, Blackberry, Tansy Ragwort, Johnson Grass, Poison Ivy, Nut Sedge, Nimble Will, Bindweed, Bent Grass, Wild Garlic, Perennial Sorrel, and Brome Grass.

2.6 REGULATORY REQUIREMENTS

A. The Contractor shall comply with regulatory agencies for fertilizer and herbicide composition.

PART 3 PRODUCTS

3.1 MATERIALS

A. Topsoil

1. Top soil shall be supplied and installed in accordance with FDOT Standard Section 162.

B. Fertilizer

1. Fertilizer shall conform to applicable state laws for the material used.
2. Commercial-grade mixture shall conform to FDOT Standards, Section 982.

C. Mulch

1. Mulch shall conform to FDOT Standards, Section 981.
2. Mulch shall be dry grain straw or hay, free of noxious weeds.
3. Mulch shall be thoroughly cured and dried before use.
4. Forest litter, pine needles, or Spanish Moss <u>will not</u> be acceptable.

D. Seed

1. All grass seed shall be the product of a reputable supplier and shall conform to the requirements of the State Department of Agriculture and Consumer Services and all applicable state laws.
2. Grass seed shall conform to FDOT Standards Section 981, with a minimum 80% purity and 80% germination with no noxious weeds.
3. Seed shall be Argentine Bahia applied at a minimum rate of 10 pounds per 1,000 square feet. A thick stand of grass shall be provided.

E. Sod

1. Sod shall conform to FDOT Standards Section 981. A thick stand of grass shall be provided at all locations.
2. Sod shall be Argentine Bahia.
3. Sod planted on private properties shall match the existing sod when practical.

F. Water

1. The water used to produce grass may be obtained from any approved source, in accordance with FDOT Section 983. The water shall be free of excess and harmful chemicals, acids, alkalis, and all substances which may be harmful to plant growth or obnoxious to traffic. Salt or brackish water shall not be used. The Contractor shall make arrangements to secure and pay for water. The Contractor shall make all provisions necessary to water until a thick stand of grass is established.

PART 4 EXECUTION

4.1 SURFACE PREPARATION

A. The entire area to be seeded, as shown on the Drawings or required in this Section, shall be covered with a 6-inch layer of muck or suitable topsoil, carefully spread and disked lightly into the existing soil and finished to the grades indicated.

4.2 FERTILIZING

A. Fertilizer shall be applied uniformly on the surface of the ground at a minimum rate as specified in Section 570 of FDOT Specifications. It shall be mixed into the soil with a disk harrow, where practicable, or by hand-raking in areas of limited accessibility. Mixing shall be continued until the fertilizer is uniformly incorporated into the top 3 inches of soil.

4.3 MULCHING

A. After spreading and mixing the fertilizer, the Contractor shall apply approximately 2 inches, loose thickness, of the mulch material uniformly over the grassing area and cut into the soil to produce a loose mulch thickness of 3 to 4 inches, in accordance with Section 570 of FDOT Specifications. Care shall be exercised to prevent the mulch from being cut too deeply into the soil.

4.4 SEEDING

A. Seed which has become wet or moldy shall not be used. Soon after the mulch material has been cut into the soil and while the soil is still loose and moist, the seed shall be scattered uniformly over the grassing area. Application shall be in conformance with FDOT Standards, Section 570.

4.5 SODDING

A. Application shall be in accordance with FDOT Standards, Section 575.

4.6 WEED CONTROL

A. The Contractor shall apply herbicides as required and as recommended by the County Agricultural Agent. Herbicides shall only be applied as needed.

4.7 COMPACTION

A. Immediately after the seeding is complete, the entire grassed or mulched area shall be compacted with a light roller. Rolling shall be continued until the area is firmly but not tightly packed.

4.8 EQUIPMENT

A. All equipment used in the operation of grassing shall be adequate to produce the required results. Equipment for placing mulch material into the soil shall be suitable for cutting the specified materials uniformly into the soil and to the required controlled depth. Rollers shall have corrugated or notched surfaces and shall be at least 12 inches in diameter. Smooth surface rollers will not be permitted.

4.9 GROUND COVER DATA

A. Planting dates, types of seeds, seed mixtures, and rates of application shall be as set forth in this Section. No changes may be made in the ground cover type without the approval of the Engineer.

4.10 GROUND COVER ESTABLISHMENT

A. General Requirements

B. The Contractor shall provide ground cover (sod and seed) establishment of the specified permanent vegetation before final acceptance of the project with no dead areas of ground cover. Groundcover (sod and seed) establishment shall consist of necessary preserving and protecting to keep the grassed areas in a satisfactory condition. The Contractor shall water the grassed areas as long and as often as necessary to promote maximum practicable growth. At any time, the Engineer may require replanting an area or portion of an area which, for any cause, shows unsatisfactory growth. Except as otherwise specified or permitted by the Engineer, the Contractor shall prepare areas to be replanted in accordance with the requirements of the Specifications as if such replanting were the initial planting. However, the type of fertilizer and the applicable rate of fertilizer to be furnished and applied by the Contractor as part of plant establishment occasioned by replanting shall be determined by soil tests or otherwise established.

C. Growth and Coverage

D. The Contractor shall be responsible for providing satisfactory growth and coverage as defined below. Growth and coverage shall be considered acceptable when all areas show a satisfactory visible growth with no bare spots larger than 1 square foot. Bare spots shall be scattered, and the total bare areas should not comprise more than 1/100 of any given area.

4.11 EXTENT OF SOD/GRASS MAINTENANCE

A. The Contractor is responsible for all sod and grass maintenance until the date of final completion of the project. Sod and grass maintenance includes cutting, watering, fertilizing, re-seeding, and re-sodding as required to maintain the required coverage of healthy, vibrant grass and sod cover.

END OF SECTION

SECTION 33 04 45

PRESSURE TESTING OF PIPING

PART 1 GENERAL

1.1 SCOPE OF WORK

A. This Section specifies the hydrostatic, pneumatic, and leakage testing of pressure piping for pumping stations, wastewater treatment plants, water treatment plants, and other facilities; water distribution and transmission mains; and raw sewage force mains and lift stations.

1.2 RELATED WORK

A. Related Specification Sections include, but are not necessarily limited to:

1. 01 33 00, Submittals.
2. 01 45 23, Testing and Inspection Services.
3. 33 31 23, Sanitary Sewerage Pressure Piping.

1.3 SUBMITTALS

A. Provide Submittals in Accordance with Section 01 33 00, Submittals.

1.4 TESTING AND INSPECTION SERVICES

1. In accordance with Section 01 45 23, Testing and Inspection Services.

1.5 REFERENCE STANDARDS

A. Reference standards and recommended practices referred to in this Specification Section shall be the latest revision of any such document in effect at the bid time. The following documents are a part of this Section. Where this Section differs from these documents, the requirements of this Section shall apply.

1. American National Standards Institute (ANSI) Standards:
   a. AWWA C600—Standard for Installation of Ductile Iron Water Mains.
   b. AWWA C605—Standard for Underground Installation of Polyvinyl Chloride (PVC) Pressure Pipe and Fittings for Water.

1.6 WARRANTIES

A. Warranties shall be in accordance with Division 01 sections regarding Warranties and Bonds.

1.7 DELIVERY, STORAGE, AND HANDLING

A. In accordance with Section 01 66 00.

1.8 TEST PRESSURES

A. Test pressures for the various services and types of piping are shown in the Piping Schedule in the Drawings. At a minimum the Contractor shall perform pressure and leakage test at 1.5 times the maximum system pressure or 100 psi, whichever is greater (based on the elevation or the lowest point of the section under test and corrected for gage location).

1.9 TESING RECORDS

A. The Contractor shall provide records of each piping installation during the testing. These records shall include the following information:

1. Date and times of test.
2. Identification of process, pipeline, or pipeline section tested or retested.
3. Identification of pipeline material.
4. Identification of pipe specification.
5. Test fluid.
6. Test duration.

B. Test pressure at low point in process, pipeline, or pipeline section.

C. Remarks: Leaks identified (type and location), types of repairs, or corrections made.

D. Certification by Contractor that the leakage rate measured conformed to the Specifications.

1.10 OPERATIONS AND MAINTENANCE (O&M) MANUALS

A. Operations and Maintenance Manuals shall be in accordance with Division 01 Sections regarding General Conditions, Supplementary Conditions, and Operations and Maintenance Data.

PART 2 PRODUCTS

2.1 VENTS AND DRAINS FOR ABOVEGROUND PIPING

A. The Contractor shall install vents on the high points of aboveground piping, whether shown in the Drawings or not. Install drains on low points of aboveground piping, whether shown in the Drawings or not. Provide a valve at each vent or drain point. Valves shall be 3/4 inch for piping 3 inches and larger and 1/2 inch for piping smaller than 3 inches. Valves shall be ball or gate valves unless otherwise shown on the Drawings. Valves shall be rated for the pressure of the adjacent piping and shall be suitable for use with the adjacent pipe material.

2.2 TESTING FLUID

A. The Owner will provide a source of supply from the existing treated water distribution system for the Contractor's use in filling the lines. An air break shall be maintained at all times between the Owner's distribution system and the Contractor's equipment to prevent cross-connection. The line shall be slowly filled with water and the specified test pressure shall be maintained in the pipe for the entire test period by means of a pump furnished by the Contractor. Provide accurate means for measuring the quantity of water required to maintain this pressure. The amount of water required is a measure of the leakage.

B. Testing fluid shall be plant service water.

C. For fuel oil piping, use potable water for hydrostatic testing and flushing.

D. For potable water pipelines, obtain and use only potable water for hydrostatic testing.

E. Submit request for use of water from waterlines of Owner 48 hours in advance.

F. The Contractor shall provide back flow prevention control for temporary connections to existing water mains.

2.3 TESTING EQUIPMENT

A. The Contractor shall provide calibrated pressure gauges, pipes, bulkheads, pumps, compressors, chart recorder, and meters to perform the hydrostatic testing. The Contractor shall provide any necessary assistance required for testing.

PART 3 EXECUTION

3.1 TESTING PREPARATION

A. Pipes shall be in place, backfilled, and anchored before beginning pressure testing.

B. The Contractor shall conduct pressure tests on exposed and aboveground piping after the piping has been installed and attached to the pipe supports, hangers, anchors, expansion joints, valves, and meters.

C. Provide any temporary piping needed to carry the test fluid to the piping that is to be tested. After the test has been completed and demonstrated to comply with the Specifications, disconnect and remove temporary piping. Do not remove exposed vent and drain valves at the high and low points in the tested piping; remove any temporary buried valves and cap the associated outlets. Plug taps or connections to the existing piping from which the test fluid was obtained.

D. Provide temporary drain lines needed to carry testing fluid away from the pipe being tested. Remove such temporary drain lines after completing the pressure testing.

E. Before starting the test, the Contractor shall notify the Engineer and the Owner's Representative.

3.2 CLEANING

A. Before conducting hydrostatic tests, the Contractor shall flush pipes with water to remove dirt and debris. For pneumatic tests, blow air through the pipes. Maintain a flushing velocity of at least 3 fps for water testing and at least 2,000 fpm for pneumatic testing. Flush pipes for the period given by the formula

$$T = \frac{2L}{3}$$

T = flushing time (seconds)

L = pipe length (feet)

B. For pipelines 24 inches or larger in diameter, acceptable alternatives to flushing are use of high-pressure water jet, sweeping, or scrubbing. Water, sediment, dirt, and foreign material accumulated during this cleaning operation shall be discharged, vacuumed, or otherwise removed from the pipe.

3.3 INITIAL PIPELINE FILLING FOR HYDROSTATIC TESTING

A. The maximum rate of filling shall not cause the water velocity in the pipeline to exceed 1 fps. Filling may be facilitated by removing automatic air valves and releasing air manually.

3.4 TESTING NEW PIPE WHICH CONNECTS TO EXISTING PIPE

A. Before testing new pipelines that are to be connected to existing pipelines, the Contractor shall isolate the new line from the existing line by test bulkheads, spectacle flanges, or blind flanges. After the new line has been successfully tested, remove test bulkheads or flanges and connect to the existing piping.

3.5 HYDROSTATIC TESTING OF ABOVEGROUND OR EXPOSED PIPING

A. Open vents at high points of the piping system to purge air while the pipe is being filled with water. Venting during system filling may also be provided by temporarily loosening flanges.

B. The piping system to the test pressure indicated on the Piping Schedule in the Drawings. Maintain the test pressure for a minimum of 2 hours. Examine joints, fittings, valves, and connections for leaks. The piping system shall show zero leakage or weeping. Correct leaks and retest until zero leakage is obtained.

3.6 REPETITION OF TEST

A. If the actual leakage exceeds the allowable leakage, locate and correct the faulty work and repeat the test. Restore the work and all damage resulting from the leak and its repair. Eliminate visible leakage.

3.7 BULKHEAD AND TEST FACILITY REMOVAL

A. After a satisfactory test, the Contractor shall remove the testing fluid, remove test bulkheads and other test facilities, and restore the pipe coatings/linings.

END OF SECTION

SECTION 33 05 10

UTILITY TRENCH EXCAVATION, EMBEDMENT, AND BACKFILL

PART 1 GENERAL

1.1 SUMMARY

A. Section Includes:

1. Excavation, Embedment and Backfill for:

a. Pressure Applications

1) Water Distribution or Transmission Main
2) Wastewater Force Main

b. Gravity Applications

1) Wastewater Gravity Mains
2) Storm Sewer Pipe and Culverts
3) Storm Sewer Precast Box and Culverts

2. Including:

a. Excavation of all material encountered, including rock and unsuitable materials
b. Disposal of excess unsuitable material
c. Site specific trench safety
d. Pumping and dewatering
e. Embedment
f. Concrete encasement for utility lines
g. Backfill
h. Compaction

B. Related Specification Sections include, but are not necessarily limited to:

1. Division 00 Sections regarding Contracting Requirements
2. Division 01 sections regarding General Requirements
3. Section 31 10 00 – Site Clearing
4. Section 31 25 00 – Erosion and Sedimentation Control

C. Definitions

1. General – Definitions used in this section are in accordance with Terminologies ASTM F412 and ASTM D8 and Terminology ASTM D653, unless otherwise noted.

2. Deleterious materials – Harmful materials such as clay lumps, silts and organic material.

1.2 REFERENCE STANDARDS

A. Reference standards cited in this Specification refer to the current reference standard published at the time of the latest revision date logged at the end of this Specification unless a date is specifically cited.

B. American Society for Testing and Materials (ASTM) Standards:

1. ASTM C33-08 Standard Specifications for Concrete Aggregates
2. ASTM C88-05 Soundness of Aggregate by Use of Sodium Sulfate or Magnesium Sulfate
3. ASTM C131 - Standard Test Method for Resistance to Degradation of Small-Size Coarse Aggregate by Abrasion and Impact in the Los Angeles Machine
4. ASTM C136-01 Test Method for Sieve Analysis of Fine and Coarse Aggregate
5. ASTM D448-08 Standard Classification for Sizes of Aggregate for Road and Bridge Construction.
6. ASTM C535-09 Standard Test Method for Resistance to Degradation of Large-Size Coarse Aggregate by Abrasion and Impact in the Los Angeles Machine
7. ASTM D588 – Standard Test method for Moisture-Density Relations of Soil-Cement Mixture
8. ASTM D698-07 Test Method for Laboratory Compaction Characteristics of Soil Using Stand Efforts (12,400 ft-lb/ft3 600 Kn-m/M3)).
9. ASTM 1556 Standard Test Methods for Density and Unit Weight of Soils in Place by Sand Cone Method.
10. ASTM 2487 – 10 Standard Classification of Soils for Engineering Purposes (Unified Soil Classification System)
11. ASTM 2321-09 Underground Installation of Thermoplastic Pipe for Sewers and Other Gravity-Flow Applications
12. ASTM 3017 - Standard Test Method for Water Content of Soil and Rock in place by Nuclear Methods (Shallow Depth)
13. ASTM D4253 - Standard Test Methods for Maximum Index Density and Unit Weight of Soils Using a Vibratory Table
14. ASTM D4254 - Standard Test Method for Minimum Index Density and Unit Weight of Soils and Calculations of Relative Density
15. ASTM D6938 - Standard Test Methods for In-Place Density and Water Content of Soil and Soil-Aggregate by Nuclear Methods (Shallow Depth)
16. ASTM G57 - Standard Test Method for Field Measurement of Soil Resistivity Using the Wenner Four-Electrode Method

C. OSHA

1. Occupational Safety and Health Administration CFR 29, Part 1926-Safety Regulations for Construction, Subpart P - Excavations

1.3 ADMINISTRATIVE REQUIREMENTS

A. Coordination

1. Utility Company Notification

a. Contact Florida 811 no less than 48 hours prior to starting excavation.
b. Notify area utility companies at least 48 hours in advance, excluding weekends and holidays, before starting excavation.
c. Request the location of buried lines and cables in the vicinity of the Work.

B. Sequencing

1. Sequence Work for each section of the pipe installed to complete the embedment and backfill placement on the day the pipe foundation is complete.
2. Sequence Work such that proctor tests are complete in accordance with ASTM D698 before commencement of construction activities.

1.4 SUBMITTALS

A. Submittals shall be in accordance with applicable Division 01 sections.

B. All submittals shall be approved by the Engineer prior to construction.

1.5 ACTION SUBMITTALS / INFORMATIONAL SUBMITTALS

A. Action submittals/informational submittals

1. Shop Drawings

a. Provide detailed drawings and explanation for ground water and surface water control, if required.
b. Trench Safety Plan in accordance with Occupational Safety and Health Administration (OSHA) excavation standards, 29 Code of Federal Regulations (CFR) Part 1926, Subpart P. The Trench Safety Plan will be submitted for record purposes only and no approval will be provided by the Engineer.
c. Stockpiled excavation and/or backfill material.

1) Provide a description of the storage of the excavated material only if the Contract Documents do not allow storage of materials in the right-of-way of the easement.

2. Product Data:

a. Materials Source: Submit name of imported materials suppliers.
b. Supplier's Certificate: Certify that products meet or exceed specified requirements.
c. Material properties:

1) Sieve analysis
2) Soil resistivity
3) Certified test reports for compaction tests

1.6 DELIVERY, STORAGE, AND HANDLING

A. Storage

1. Spoil, imported embedment, and backfill materials may be stored within easements or temporary construction easements, unless specifically disallowed in the Contract Documents.
2. Do not block drainage ways, inlets or driveways.
3. Provide erosion control in accordance with Section 31 25 00.
4. Materials shall not be stored in the Right-of-Way of any jurisdiction.
5. In non-paved areas, do not store material on the root zone of any trees or in landscaped areas.
6. Designated Storage Areas

a. If the Contract Documents do not allow the storage of spoils, embedment, or backfill materials within easements or temporary construction easements, then secure and maintain an adequate storage location.
b. Provide an affidavit that rights have been secured to store the materials on private property.
c. Provide erosion control in accordance with Section 31 25 00.
d. Do not block drainage ways.

B. Deliveries and haul-off - Coordinate all deliveries and haul-off.

1.7 SITE CONDITIONS

A. Existing Conditions

1. Any data which has been or may be provided on subsurface conditions is not intended as a representation or warranty of accuracy or continuity between soils. It is expressly understood that neither the Owner nor the Engineer will be responsible for interpretations or conclusions drawn therefrom by the Contractor.

2. Data are made available for the convenience of the Contractor.

1.8 WARRANTY

A. Warranty shall be in accordance with the General Conditions and Supplemental Conditions, and/or other Division 00 and 01 Sections.

PART 2 PRODUCTS

2.1 MATERIALS

A. Materials

1. Utility Sand:

a. Granular and free flowing
b. Meet or exceed the limits on deleterious substances per Table 1 for fine aggregate according to ASTM C 33
c. Free of organic material
d. Gradation: sand material consisting of durable particles, free of thin or elongated pieces, lumps of clay, loam or vegetable matter and meets the following gradation may be used for utility sand embedment/backfill, and graded with following limits when tested in accordance with ASTM C136.

Sieve Size	Percent Retained
½”	0
¼”	0-5
#4	0-10
#16	0-20
#50	20-70
#100	60-90
#200	90-100

2. Crushed Rock:

a. Durable crushed rock or recycled concrete.
b. Meets the gradation of ASTM D448 size numbers 56, 57, or 67.
c. May be unwashed.
d. Free from silt clay or unsuitable materials.
e. Percentage of wear not more than 40% per ASTM C131 or C535.
f. Not more than a 12% maximum loss when subjective to 5 cycles of sodium sulfate soundness per ASTM C88.

3. Fine Crushed Rock:
   a. Durable crushed rock.
   b. Meets the gradation of ASTM D448 size numbers 8 or 89.
   c. May be unwashed.
   d. Free from silt, clay, or unsuitable materials.
   e. Have a percentage of wear not more than 40% per ASTM C131 or C535.
   f. Not more than a 12% maximum loss when subjected to 5 cycles of sodium sulfate soundness per ASTM C88.
4. Acceptable Backfill Material:
   a. In-situ or imported soils classified as CL, SC, or GC in accordance with ASTM D2487.
   b. Free from deleterious materials, boulders over 4 inches in size, and organics.
   c. Can be placed free from voids.
   d. Maximum 20% passing the number 200 sieve.
5. Unacceptable Backfill Material:
   a. In-situ soils classified as ML, MH, PT, OL, or OH in accordance with ASTM D2487.
6. Select Fill:
   a. Classified as SC or CL in accordance with ASTM D2487.
   b. Liquid limit less than 35.
   c. Plasticity index between 8 and 20.
7. Cement Stabilized Sand (CSS):
   a. Sand:
      1) Shall be clean, durable sand meeting grading requirements for fine aggregates of ASTM C33 and the following requirements:
         a) Classified as SW, SP, or SM by the United Soil Classification System of ASTM D2487
         b) Deleterious materials:
            (1) Clay lumps, ASTM C142, less than 0.5%
            (2) Lightweight pieces, ASTM C123, less than 5.0%
            (3) Organic impurities, ASTM C40, color no darker than standard color
            (4) Plasticity index of 4 or less when tested in accordance with ASTM D4318.
   b. Minimum of 4% cement content of Type I/II portland cement.
   c. Water:
      1) Potable water, free of soils, acids, alkalis, organic matter or other deleterious substances, meeting requirements of ASTM C94.
   d. Mix in a stationary pug mill, weigh-batch or continuous mixing plant.

e. Strength:

1) 50 to 150 psi compressive strength at 2 days in accordance with ASTM D1633, Method A.
2) 200 to 250 psi compressive strength at 28 days in accordance with ASTM D1633, Method A.
3) The maximum compressive strength in 7 days shall be 400 psi. Backfill that exceeds the maximum compressive strength shall be removed by the Contractor for no additional compensation.

f. Random samples of delivered product will be taken in the field at point of delivery for each day of placement in the work area. Specimens will be prepared in accordance with ASTM D1632.

8. Controlled Low Strength Material (CLSM):

a. Conform to Section 03 30 00.

9. Trench Geotextile Fabric:

a. Soils other than ML or OH in accordance with ASTM D2487:

1) Needle punch, nonwoven geotextile composed of polypropylene fibers.
2) Fibers shall retain their relative position.
3) Inert to biological degradation.
4) Resist naturally occurring chemicals.
5) UV Resistant.
6) Mirafi 140N by Tencate, or approved equal.

10. Concrete Encasement:

a. Conform to Section 03 30 00.

PART 3 EXECUTION

3.1 EXAMINATION

A. Contact Sunshine811 prior to beginning excavation.

B. Verification of Conditions

1. Review all known, identified, or marked utilities, whether public or private, prior to excavation.
2. Locate and protect all known, identified, and marked utilities or underground facilities as excavation progresses.
3. The information and data shown in the Drawings with respect to utilities is approximate and based on record information or on physical appurtenances observed within the project limits.
4. Coordinate with the owner(s) of underground facilities.
5. Immediately notify any utility owner of damages to underground facilities resulting from construction activities.
6. Repair any damages resulting from the construction activities.

C. Notify the Engineer immediately of any changed condition that impacts excavation and installation of the proposed utility.

3.2 PREPARATION

A. Protection of In-Place Conditions

1. Pavement:

   a. Conduct activities in such a way that does not damage existing pavement that is designated to remain.

      1) Where desired to move equipment not licensed for operation on public roads or across pavement, provide means to protect the pavement from all damage.

   b. Repair or replace any pavement damaged resulting from performance of the Work outside the limits designated for pavement removal at no additional cost to the Owner.

2. Drainage:

   a. Maintain positive drainage during construction and re-establish drainage for all swales and culverts affected by construction.

3. Trees:

   a. When operating outside of existing ROW, stake permanent and temporary construction easements.
   b. Restrict all construction activities to the designated easements.
   c. Flag and protect all trees designated to remain in accordance with Section 31 10 00.
   d. Conduct excavation, embedment, and backfill in a manner such that there is no damage to the tree canopy.
   e. Prune or trim tree limbs as specifically allowed by the Drawings or as specifically allowed by the Engineer.

      1) Pruning or trimming may only be accomplished with equipment specifically designed for tree pruning or trimming.

   f. Remove trees specifically designated to be removed in the Drawings in accordance with Section 31 10 00.

4. Above Ground Structures:

5. Traffic:

   a. Maintain traffic in accordance with the Traffic Control Plan(s).
   b. Maintain safe sight distances around stockpiled materials.
   c. Do not block access to driveways or alleys for extended periods of time unless:

      1) Alternative access has been provided.
      2) Proper notification has been provided to the property owner or resident.
      3) It is specifically allowed in the Traffic Control Plan.

   d. Use traffic rated plates to maintain access until access is restored.

6. Traffic Signal – Poles, Mast Arms, Pull boxes, Detector loops:
   a. Notify the agency having jurisdiction a minimum of 48 hours prior to any excavation that could impact the operations of an existing traffic signal.
   b. Protect all traffic signal poles, mast arms, pull boxes, traffic cabinets, conduit, and detector loops.
   c. Immediately notify the agency having jurisdiction if any damage occurs to any component of the traffic signal due to the Contractor's activities.
   d. Repair any damage to the traffic signal poles, mast arms, pull boxes, traffic cabinets, conduit, and detector loops as a result of the construction activities.
7. Fences:
   a. Protect all fences designated to remain.
   b. Fences shall be restored to preconstruction condition or better.

3.3 INSTALLATION

A. Excavation:

1. No blasting or burning of material will be allowed.
2. Excavate to a depth indicated on the Drawings.
3. Trench excavations are defined as unclassified. No additional payment shall be granted for rock or other in-situ materials encountered in the trench.
4. Excavate to a width sufficient for laying the pipe in accordance with the Drawings and brace in accordance with the Trench Safety Plan.
5. The bottom of the excavation shall be firm and free from standing water.
   a. Notify the Engineer immediately if the water and/or the in-situ soils do not provide for a firm trench bottom.
   b. The Engineer will determine if any changes are required in the pipe foundation or bedding.
6. Unless otherwise permitted by the Drawings or by the Engineer, the limits of the excavation shall not advance beyond the pipe placement so that the trench may be backfilled in the same day.
7. Over Excavation:
   a. Fill over excavated areas with the specified bedding material for the specific pipe to be installed.
   b. No additional payment will be made for over excavation or additional bedding material.
8. Unacceptable Backfill Materials:
   a. In-situ soils classified as unacceptable backfill material shall be separated from acceptable backfill materials.
   b. If the unacceptable backfill material is to be blended in accordance with this Specification, then store material in a suitable location until the material is blended.

9. Removal and Disposal of Excavated Materials:
    a. Remove all unacceptable materials not intended to be blended or modified.
    b. Remove all materials in excess of that required for backfill.
    c. Removed excavated materials shall be disposed of in an approved solid waste disposal site in compliance with all applicable federal, state, and local regulations.

B. Shoring, Sheeting, and Bracing:
1. Engage a Licensed Professional Engineer in the State of Florida to design a site specific excavation safety system in accordance with Federal and State requirements.
2. Excavation protection systems shall be designed according to the space limitations as indicated in the Drawings.
3. Furnish, put in place, and maintain a trench safety system in accordance with the Excavation Safety Plan and required by Federal, State, or local safety requirements.
4. If soil or water conditions are encountered that are not addressed by the current Excavation Safety Plan, engage a Licensed Professional Engineer in the State of Florida to modify the Excavation Safety Plan and provide a revised submittal to the Engineer.
5. Do not allow soil, or water containing soil, to migrate through the Excavation Safety System in sufficient quantities to adversely affect the suitability of the Excavation Protection System. Movable bracing, shoring plates or trench boxes used to support the sides of the trench excavation shall not:
    a. Disturb the embedment located in the pipe zone or lower.
    b. Alter the pipe's line and grade after the Excavation Protection System is removed.
    c. Compromise the compaction of the embedment located below the spring line of the pipe and in the haunching.

C. Water Control
1. Surface Water:
    a. Furnish all materials and equipment and perform all incidental work required to direct surface water away from the excavation.
2. Ground Water:
    a. Furnish all materials and equipment to dewater ground water by a method which preserves the undisturbed state of the subgrade soils.
    b. Do not allow the pipe to be submerged within 24 hours after placement.
    c. Do not allow water to flow over concrete until it has sufficiently cured.

d. Engage a Licensed Professional Engineer in the State of Florida to prepare a Ground Water Control Plan if any of the following conditions are encountered:

1) A Ground Water Control Plan is specifically required by the Contract Documents
2) If in the sole judgment of the Engineer, ground water is so severe that an Engineered Ground Water Control Plan is required to protect the trench or the installation of the pipe which may include:

a) Ground water levels in the trench are unable to be maintained below the top of the bedding.
b) A firm trench bottom cannot be maintained due to ground water.
c) Ground water entering the excavation undermines the stability of the excavation.
d) Ground water entering the excavation is transporting unacceptable quantities of soils through the Excavation Safety System.

e. In the event that there is no bid item for a Ground Water Control and the Engineer requires an Engineered Ground Water Control Plan due to conditions discovered at the Site, the Contractor will be eligible to submit a request for change order.

f. Control of ground water shall be considered subsidiary to the excavation when:

1) No Ground Water Control Plan is specifically identified and required in the Contract Documents.

g. Ground Water Control Plan installation, operation, and maintenance:

1) Furnish all materials and equipment necessary to implement, operate, and maintain the Ground Water Control Plan.
2) Once the excavation is complete, remove all ground water control equipment not called to be incorporated into the work.

h. Water Disposal:

1) Dispose of ground water in accordance with all federal, state, and local regulations.
2) Do not discharge ground water onto or across private property without written permission.
3) Permission from the agency having jurisdiction is required prior to disposal into a sanitary sewer system.

D. Embedment and Pipe Placement:

1. Water Lines less than, or equal to, 16 inches in diameter:

a. The entire embedment zone shall be of uniform material.
b. Utility sand shall be generally used for embedment.
c. Crushed rock or fine crushed rock shall be used for embedment for excavated trench depths 15 feet, or greater.
d. If ground water is in sufficient quantity to cause sand to pump, then use crushed rock as embedment.
e. Place evenly spread bedding material on a firm trench bottom.
f. Provide firm, uniform bedding.
g. Place pipe on the bedding in accordance with the alignment of the Drawings.
h. In no case shall the top of the pipe be less than 42 inches from the surface of the proposed grade, unless specifically called for in the Drawings.

i. Place embedment, including initial backfill, to a minimum of 6 inches, but not more than 12 inches, above the pipe.
j. Where gate valves are present, the initial backfill shall extend to 6 inches above the elevation of the valve nut.
k. Form all blocking against undisturbed trench wall to the dimensions in the Drawings.
l. Compact embedment.

2. Water Lines 24-inches and greater in diameter

a. The entire embedment zone shall be of uniform material.
b. Crushed rock shall be used for embedment.
c. Provide trench geotextile fabric at any location where crushed rock or fine crushed rock come into contact with utility sand.
d. Place evenly spread bedding material on a firm trench bottom.
e. Provide firm, uniform bedding.

1) Additional bedding may be required if ground water is present in the trench.

f. Place pipe on the bedding according to the alignment shown on the Drawings.
g. The pipe line shall be within:

1) ±1 inch of the elevation on the Drawings for 30-inch and larger water lines.

h. Place and compact embedment material to adequately support haunches in accordance with the pipe manufacturer's recommendations.

1) Spade to full depth of lift to eliminate voids or bridging.

i. Crushed limestone shall be placed in maximum 12-inch compacted lift thickness in zone between 0.3 times the outside diameter of the pipe invert, and the top of the embedment zone.
j. For steel pipe greater than 30 inches in diameter, the initial embedment lift shall not exceed the spring line prior to compaction.
k. Where gate valves are present, the initial backfill shall extend to up to the valve nut.
l. Compact the embedment and initial backfill to 95% Standard Proctor Density per ASTM D 4253.
m. Density test may be performed by Owner to verify that the compaction of embedment meets requirements.
n. Place trench geotextile fabric on top of the initial backfill.

E. Trench Backfill:

1. At a minimum, place backfill in such a manner that the required in-place density and moisture content is obtained, and so that there will be no damage to the surface, pavement or structures due to any trench settlement or trench movement.

a. Meeting the requirement herein does not relieve the responsibility to damages associated with the Work.

2. Backfill Material:
   a. Final backfill depth less than 15 feet:
      1) Backfill with:
         a) Acceptable backfill material
         b) Blended backfill material, or
         c) Select backfill material, CSS, or CLSM when specifically required
   b. Final backfill depth 15 feet or greater: (under pavement or future pavement)
      1) Backfill depth from 0 to15 feet deep:
         a) Backfill with:
            (1) Acceptable backfill material
            (2) Blended backfill material, or
            (3) Select backfill material, CSS, or CLSM when specifically required
      2) Backfill depth from 15 feet and greater:
         a) Backfill with:
            (1) Select Fill
            (2) CSS, or
            (3) CLSM when specifically required
   c. Final backfill depth 15 feet or greater: (<u>not</u> under pavement or future pavement)
      1) Backfill with:
         a) Acceptable backfill material, or
         b) Blended backfill material
   d. Backfill for service lines:
      1) Backfill for water service lines shall be the same as the requirement of the main that the service is connected to.
3. Required Compaction and Density
   a. Final backfill (depths less than 15 feet):
      1) Compact acceptable backfill material, blended backfill material or select backfill to a minimum of 95% Standard Proctor per ASTM D698 at moisture content within -2 to +5% of the optimum moisture.
      2) CSS or CLSM requires no compaction.
   b. Final backfill (depths 15 feet and greater/under existing or future pavement):
      1) Compact select backfill to a minimum of 98% Standard Proctor density per ASTM D 698 at moisture content within -2 to +5% of the optimum moisture.
      2) CSS or CLSM requires no compaction.
   c. Final backfill (depths 15 feet and greater/<u>not</u> under existing or future pavement):
      1) Compact acceptable backfill material blended backfill material, or select backfill to a minimum of 95% Standard Proctor density per ASTM D 698 at moisture content within -2 to +5% of the optimum moisture.

4. Saturated Soils:
    a. If in-situ soils consistently demonstrate that they are greater than 5% over optimum moisture content, the soils are considered saturated.
    b. Flooding the trench or water jetting is strictly prohibited.
    c. If saturated soils are identified in the Drawings or Geotechnical Report in the Appendix, Contractor shall proceed with Work following all backfill procedures outlined in the Drawings for areas of soil saturation greater than 5%.
    d. If saturated soils are encountered during Work but not identified in Drawings or Geotechnical Report in the Appendix:
        1) The Contractor shall:
            a) Immediately notify the Engineer.
            b) Submit a Contract Claim for Extra Work associated with direction from Engineer.
        2) The Engineer shall:
            a) Investigate soils and determine if Work can proceed in the identified location.
            b) Direct the Contractor of changed backfill procedures associated with the saturated soils that may include:
                (1) Imported backfill
                (2) A site specific backfill design
5. Placement of Backfill:
    a. Use only compaction equipment specifically designed for compaction of a particular soil type and within the space and depth limitation experienced in the trench.
    b. Flooding the trench or water jetting is strictly prohibited.
    c. Place in loose lifts not to exceed 12 inches.
    d. Compact to specified densities.
6. Backfill Means and Methods Demonstration:
    a. Notify the Engineer in writing with sufficient time to obtain samples and perform standard proctor test in accordance with ASTM D698.
    b. The results of the standard proctor test must be received prior to beginning excavation.
    c. Upon commencing of backfill placement for the project the Contractor shall demonstrate means and methods to obtain the required densities.
    d. Demonstrate Means and Methods for compaction including:
        1) Depth of lifts for backfill which shall not exceed 12 inches.
        2) Method of moisture control for excessively dry or wet backfill.
        3) Placement and moving trench box, if used.
        4) Compaction techniques in an open trench.
        5) Compaction techniques around structure.
    e. Provide a testing trench box to provide access to the recently backfilled material.
    f. The Owner will retain a qualified testing lab full time during this period to randomly test density and moisture content.
        1) The testing lab will provide results as available on the job site.

7. Varying Ground Conditions:
    a. Notify the Engineer of varying ground conditions and the need for additional proctors.
    b. Request additional proctors when soil conditions change.
    c. The Engineer may acquire additional proctors at its discretion.
    d. Significant changes in soil conditions will require an additional Means and Methods demonstration.

F. Field Tests and Inspections

1. Proctors
    a. The Contractor will perform Proctors in accordance with ASTM D2453.
    b. Test results will generally be available to within 4 calendar days and distributed to:
        1) Contractor
        2) Owner's Representative
        3) Engineer
    c. Notify the Engineer if the characteristic of the soil changes.
    d. Perform new proctors for varying soils:
        1) When indicated in the geotechnical investigation in the Appendix
        2) If notified by the Contractor
        3) At the convenience of the Owner
    e. Trenches where different soil types are present at different depths, the proctors shall be based on the mixture of those soils.
2. Density Testing of Backfill:
    a. Density Tests shall be in conformance with ASTM D6938.
    b. Provide testing trench protection for trench depths in excess of 5 feet.
    c. Place, move and remove testing trench protection as necessary to facilitate all test conducted by the Owner's Representative.
    d. For final backfill depths less than 15 feet and trenches of any depth <u>not</u> under existing or future pavement:
        1) Perform density testing twice per working day when backfilling operations are being conducted.
        2) The testing lab shall take a minimum of 3 density tests of the current lift in the available trench.
    e. For final backfill depths 15 feet and greater deep and under existing or future pavement:
        1) Perform density testing twice per working day when backfilling operations are being conducted.
        2) The testing lab shall take a minimum of 3 density tests of the current lift in the available trench.
        3) The testing lab will remain onsite sufficient time to test 2 additional lifts.
    a. Make the excavation available for testing.
    b. The Owner's Representative will determine the location of the test.
    c. The Contractor's testing lab will provide results to Contractor and the Owner's Inspector upon completion of the testing.

d. Test reports shall include:

1) Location of test by station number
2) Time and date of test
3) Depth of testing
4) Field moisture
5) Dry density
6) Proctor identifier
7) Percent Proctor Density

3. Density of Embedment:

a. The Owner may test fine crushed rock or crushed rock embedment in accordance with ASTM D2922 or ASTM 1556.

G. Non-Conforming Work

1. All non-conforming work shall be removed, replaced, and retested.

END OF SECTION

SECTION 33 05 97

IDENTIFICATION AND SIGNAGE FOR UTILITIES – MARKING TAPE

PART 1 GENERAL

1.1 SUMMARY

A. Section Includes:
   1. Plastic ribbon tape for placement above direct-buried utility.

B. Related Requirements:

   1. Section 33 31 23 - Sanitary Sewerage Force Main Piping.

1.2 SUBMITTALS

A. Applicable Division 01 Sections regarding Submittals

B. Product Data: Submit manufacturer catalog information for each specified product.

C. Manufacturer's Certificate: Certify that products meet or exceed specified requirements.

D. Qualifications Statement:

   1. Submit qualifications for manufacturer.

1.3 CLOSEOUT SUBMITTALS

A. Applicable Division 01 Sections regarding Project Closeout.

1.4 MAINTENANCE MATERIAL SUBMITTALS

A. Applicable Division 01 Sections regarding Project Closeout.

1.5 QUALITY ASSURANCE

A. Perform Work according to AWWA standards.

1.6 QUALIFICATIONS

A. Manufacturer: Company specializing in manufacturing products specified in this Section with minimum five (5) years of experience.

PART 2 PRODUCTS

2.1 MARKING TAPE, DETECTABLE UNDERGROUND

A. Description:
1. Underground Detectable Marking Tape shall be aluminum foil to mark the location of water mains, sewage force mains, reuse mains, and gravity sewers.
2. Tape shall have a minimum 5 mil overall thickness with 0.35 mil solid aluminum foil core.
3. Construction shall be 0.8 mil clear fiber, reverse print laminated to aluminum foil to 3.75 mil clear fiber, making a film permanently printed.
4. Tape shall meet the thickness requirements of ASTM D2103, 5.0 mil, and tensile strength meeting requirements of ASTM D882, 15,000 psi.
5. Color shall be blue for water, green for sewage force mains and gravity sewer, and purple for reuse mains, with “Potable Water”, “Sewer Force Main”, “Sewer”, or “Reclaimed Water” written on the tape accordingly.

PART 3 EXECUTION

3.1 INSTALLATION

A. The Contractor shall install Marking Tape 12 inches to 18 inches above the top of the pipe.

END OF SECTION

SECTION 33 11 11

DUCTILE IRON FITTINGS

PART 1 GENERAL

1.1 SUMMARY

A. Section Includes:

1. Ductile Iron Fittings 3-inch through 64-inch for potable water, wastewater, and other liquids for use with Ductile Iron Pipe and Polyvinyl Chloride (PVC) Pipe
2. All mechanical joint fittings shall be mechanically restrained using restrained wedge type retainer glands.

B. Related Specification Sections include, but are not necessarily limited to:

1. Division 00 – Contracting Requirements
2. Division 01 – General Requirements
3. Section 03 30 00 – Cast-in-Place Concrete

1.2 PRICE AND PAYMENT PROCEDURES

A. Measurement and Payment

1. Work associated with this Item is either included in the Bid Form or is considered subsidiary to the various Items bid. No separate payment will be allowed for this Item that is not explicitly included in the Bid Form.

1.3 REFERENCES

A. Definitions

1. Gland or Follower Gland
   a. Non-restrained, mechanical joint fitting
2. Retainer Gland
   a. Mechanically restrained mechanical joint fitting, consisting of multiple gripping wedges incorporated into a follower gland meeting the applicable requirements of ANSI/AWWA C110/A21.10.

B. Reference Standards

1. Reference standards cited in this Specification refer to the current reference standard published at the time of the latest revision date logged at the end of this Specification, unless a date is specifically cited.
2. American Society of Mechanical Engineers (ASME):
   a. B16.1, Gray Iron Pipe Flanges and Flanged Fittings (Classes 25, 125 and 250).
3. ASTM International (ASTM):
   a. A193, Standard Specification for Alloy-Steel and Stainless Steel Bolting for High Temperature or High Pressure Service and Other Special Purpose Applications
   b. A194, Specification for Carbon and Alloy Steel Nuts for Bolts for High Pressure or High Temperature Service, or Both
   c. A242, Standard Specification for High-Strength Low-Alloy Structural Steel.
   d. A674, Standard Practice for Polyethylene Encasement for Ductile Iron Pipe for Water or Other Liquids.
   e. B117, Standard Practice for Operating Salt Spray (Fog) Apparatus.

4. American Water Works Association (AWWA):
   a. C203, Coal-Tar Protective Coatings and Linings for Steel Water Pipelines - Enamel and Tape - Hot Applied.
   b. C600, Installation of Ductile-Iron Water Mains and their Appurtenances.
   c. M41, Ductile-Iron Pipe and Fittings.
5. American Water Works Association/American National Standards Institute (AWWA/ANSI):
   a. C104/A21.4, Cement–Mortar Lining for Ductile-Iron Pipe and Fittings.
   b. C105/A21.5, Polyethylene Encasement for Ductile-Iron Pipe Systems.
   c. C110/A21.10, Ductile-Iron and Gray-Iron Fittings.
   d. C111/A21.11, Rubber-Gasket Joints for Ductile-Iron Pressure Pipe and Fittings.
   e. C115/A21.15, Flanged Ductile-Iron Pipe with Ductile-Iron or Gray-Iron Threaded Flanges.
   f. C151/A21.51, Ductile-Iron Pipe, Centrifugally Cast, for Water.
   g. C153/A21.53, Ductile-Iron Compact Fittings for Water Service.
6. NSF International (NSF):
   a. 61, Drinking Water System Components - Health Effects.
7. Society for Protective Coatings (SSPC):
   a. PA 2, Measurement of Dry Coating Thickness with Magnetic Gages.

1.4 SUBMITTALS

A. Submittals shall be in accordance with Section 01 33 00.
B. All submittals shall be approved by the Owner prior to delivery and/or fabrication for specials.

1.5 ACTION SUBMITTALS / INFORMATIONAL SUBMITTALS

A. Product Data
1. Ductile Iron Fittings
   a. Pressure class
   b. Interior lining
   c. Joint types
2. Polyethylene encasement and tape
   a. Planned method of installation
   b. Whether the film is linear low density or high density cross linked polyethylene
   c. The thickness of the film provided
3. The interior lining, if it is other than cement mortar lining in accordance with AWWA/ANSI C104/A21.4
   a. Material
   b. Application recommendations
   c. Field touch-up procedures
4. Thrust Restraint
   a. Retainer glands
   b. Thrust harnesses
   c. Any other means
5. Gaskets
   a. Provide Gaskets in accordance with Section 33 11 05.

6. Isolation Flanges
   a. Flanges required by the drawings to be Isolation Flanges shall conform to Section 33 04 10.
7. Bolts and Nuts
   a. Mechanical Joints
      1) Provide bolts and nuts in accordance with Section 33 11 05.
   b. Flanged Ends
      1) Meet requirements of AWWA C115.
         a) Provide bolts and nuts in accordance with Section 33 11 05.
8. Flange Coatings
   a. Connections to Steel Flanges
      1) Buried connections with Steel Flanges shall be coated with a Petrolatum Tape System in accordance with Section 33 11 05.

B. Certificates
1. The manufacturer shall furnish an affidavit certifying that all Ductile Iron Fittings meet the provisions of this Section and meet the requirements of AWWA/ANSI C110/A21.10 or AWWA/ANSI C153/A21.53.
2. Furnish a certificate stating that buried bolts and nuts conform to ASTM B117.

1.6 QUALITY ASSURANCE

A. Qualifications
1. Manufacturers
   a. Fittings manufacturing operations (fittings, lining, and coatings) shall be performed under the control of the manufacturer.
   b. Ductile Iron Fittings shall be manufactured in accordance with AWWA/ANSI C110/A21.10 or AWWA/ANSI C153/A21.53.
      1) Perform quality control tests and maintain the results as outlined in these standards to assure compliance.

B. Preconstruction Testing
1. The Owner may, at its own cost, subject random fittings for destructive testing by an independent laboratory for compliance with this Specification.
   a. The compliance test shall be performed in the United States.
   b. Any visible defects or failure to meet the quality standards herein will be grounds for rejecting the entire order.

1.7 DELIVERY, STORAGE, AND HANDLING

A. Storage and Handling Requirements
1. Store and handle in accordance with the guidelines as stated in AWWA M41.
2. Secure and maintain a location to store the material and coordinate with Owner

PART 2 PRODUCTS

2.1 EQUIPMENT, PRODUCT TYPES AND MATERIALS

A. Manufacturers
1. The manufacturer must comply with this Specification and related Sections.

B. Ductile Iron Fittings

1. Ductile Iron Fittings shall be in accordance with AWWA/ANSI C110/A21.10, AWWA/ANSI C153/A21.53.
2. All fittings for potable water service shall meet the requirements of NSF 61.
3. Ductile Iron Fittings, at a minimum, shall meet or exceed the pressures classes of the pipe which the fitting is connected, unless specifically indicated in the Drawings.
4. Fittings Markings
   a. Meet the minimum requirements of AWWA/ANSI C151/A21.51.
   b. Minimum markings shall include:
      1) "DI" or "Ductile" cast or metal stamped on each fitting
      2) Applicable AWWA/ANSI standard for that the fitting
      3) Pressure rating
      4) Number of degrees for all bends
      5) Nominal diameter of the openings
      6) Year and country fitting was cast
      7) Manufacturer's mark
5. Joints
   a. Mechanical Joints with mechanical restraint
      1) Comply with AWWA/ANSI C111/A21.11 and applicable parts of ANSI/AWWA C110/A21.10.
      2) The retainer gland shall have the following working pressure ratings based on size and type of pipe:
         a) Ductile Iron Pipe
            (1) 3-inch – 16-inch, 350 psi
            (2) 18-inch – 48-inch, 250 psi
         b) PVC C900 and C905
            (1) 3-inch – 12-inch, 305psi
            (2) 14-inch – 16-inch, 235psi
            (3) 18-inch – 20-inch, 200psi
            (4) 24-inch – 30 –inch 165psi
         c) Ratings are for water pressure and must include a minimum safety factor of 2 to 1 in all sizes
      3) Retainer glands shall have specific designs for Ductile Iron and PVC and it should be easy to differentiate between the 2.
      4) Gland body, wedges and wedge actuating components shall be cast from grade 65-45-12 ductile iron material in accordance with ASTM A536.
      5) Mechanical joint restraint shall require conventional tools and installation procedures per AWWA C600, while retaining full mechanical joint deflection during assembly as well as allowing joint deflection after assembly.
      6) Proper actuation of the gripping wedges shall be ensured with torque limiting twist off nuts.
      7) A minimum of 6 wedges shall be required for 8 inch diameter PVC pipe.
   b. Push-On, Restrained Joints
      1) Restraining Push-on joints by means of a special gasket
         a) Only those products that are listed in 01 60 00

b) The working pressure rating of the restrained gasket must exceed the test pressure of the pipe line to be installed.
c) Approved for use of restraining Ductile Iron Pipe in casing with a carrier pipe of 4-inches to 12-inches
d) Otherwise only approved if specially listed on the drawings

2) Push-on Restrained Joint bell and spigot

a) Only those products list in the standard products list will be allowed for the size listed in the standard products list per Section 01 60 00
b) Pressure rating shall exceed the working and test pressure of the pipe line

c. Flanged Joints

1) AWWA/ANSI C115/A21.15, ASME B16.1, Class 125
2) Flange bolt circles and bolt holes shall match those of ASME B16.1, Class 125.
3) Field fabricated flanges are prohibited.

6. Isolation Flanges

a. Flanges required by the drawings to be Isolation Flanges shall conform to Section 33 04 10.

7. Bolts and Nuts

a. Flanged Ends

1) Meet requirements of AWWA C115.

8. Flange Coatings

a. Connections to Steel Flanges

1) Buried connections with Steel Flanges shall be coated with a Petrolatum Tape System in accordance with Section 33 11 05.

9. Ductile Iron Fitting Exterior Coatings

a. All Ductile Iron Fittings shall have an asphaltic coating, minimum of 1 mil thick, on the exterior, unless otherwise specified in the Contract Documents.

10. Polyethylene Encasement

a. All buried Ductile Iron Fittings shall be polyethylene encased.
b. Use only virgin polyethylene material.
c. Encasement for buried fittings shall be 8 mil linear low density (LLD) polyethylene conforming to AWWA/ANSI C105/A21.5 or 4 mil high density cross-laminated (HDCL) polyethylene encasement conforming to conforming to AWWA/ANSI C105/A21.5 and ASTM A674.
d. Marking: At a minimum of every 2 feet along its length, the mark the polyethylene film with the following information:

1) Manufacturer's name or trademark
2) Year of manufacturer
3) AWWA/ANSI C105/A21.5
4) Minimum film thickness and material type
5) Applicable range of nominal diameter sizes
6) Warning – Corrosion Protection – Repair Any Damage

e. Special Markings/Colors

1) Reclaimed Water, perform one of the following:

a) Label polyethylene encasement with “RECLAIMED WATER”,
b) Provide purple polyethylene in accordance with the American Public Works Association Uniform Color Code; or
c) Attach purple reclaimed water marker tape to the polyethylene wrap.

2) Wastewater, perform one of the following:

a) Label polyethylene encasement with “WASTEWATER”;
b) Provide green polyethylene in accordance with the American Public Works Association Uniform Color Code; or
c) Attach green sanitary sewer marker tape to the polyethylene wrap.

f. Minimum widths

Polyethylene Tube and Sheet Sizes for Push-On Joint Fittings

Nominal Fittings Diameter (inches)	Min. Width – Flat Tube (inches)	Min. Width – Sheet (inches)
3	14	28
4	14	28
6	16	32
8	20	40
10	24	48
12	27	54
14	30	60
16	34	68
18	37	74
20	41	82
24	54	108
30	67	134
36	81	162
42	81	162
48	95	190
54	108	216
60	108	216
64	121	242

11. Ductile Iron Fittings Interior Lining

a. Cement Mortar Lining

1) Ductile Iron Fittings for potable water shall have a cement mortar lining in accordance with AWWA/ANSI C104/A21.4 and be acceptable according to NSF 61.

b. Ceramic Epoxy or Epoxy Linings

1) Ductile Iron Fittings for use in wastewater applications shall be lined with a Ceramic Epoxy or Epoxy lining as designated in the Standard Products List as shown in Section 01 60 00.
2) Apply lining at a minimum of 40 mils DFT
3) Due to the tolerances involved, the gasket area and spigot end up to 6 inches back from the end of the spigot end must be coated with 6 mils nominal, 10 mils maximum using a Joint Compound as supplied by the manufacturer.
   a) Apply the joint compound by brush to ensure coverage.
   b) Care should be taken that the joint compound is smooth without excess buildup in the gasket seat or on the spigot ends.
   c) Coat the gasket seat and spigot ends after the application of the lining.
4) Surface preparation shall be in accordance with the manufacturer's recommendations.
5) Check thickness using a magnetic film thickness gauge in accordance with the method outlined in SSPC PA 2.
6) Test the interior lining of all fittings for pinholes with a non-destructive 2,500 volt test.
   a) Repair any defects prior to shipment.
7) Mark each fitting with the date of application of the lining system along with its numerical sequence of application on that date and records maintained by the applicator of his work.
8) For all Ductile Iron Fittings in wastewater service where the fitting has been cut, coat the exposed surface with the touch-up material as recommended by the manufacturer.
   a) The touch-up material and the lining shall be of the same manufacturer.

PART 3 EXECUTION

3.1 INSTALLATION

A. General

1. Install fittings, specials and appurtenances as specified herein, as specified in AWWA C600, AWWA M41, and in accordance with the fittings manufacturer's recommendations.
2. Lay fittings to the lines and grades as indicated in the Drawings.
3. Excavate and backfill trenches in accordance with 33 05 10.
4. Embed Ductile Iron Fittings in accordance with 33 05 10.

B. Joint Making

1. Mechanical Joints with required mechanical restraint
   a. All mechanical joints require mechanical restraint.
   b. Bolt the retainer gland into compression against the gasket, with the bolts tightened down evenly then cross torqued in accordance with AWWA C600.
   c. Overstressing of bolts to compensate for poor installation practice will not be permitted.
2. Push-on Joints (restrained)
   a. All push-on joints shall be restrained push-on type.
   b. Install Push-on joints as defined in AWWA/ANSI C111/A21.11.
   c. Wipe clean the gasket seat inside the bell of all extraneous matter.
   d. Place the gasket in the bell in the position prescribed by the manufacturer.
   e. Apply a thin film of non-toxic vegetable soap lubricant to the inside of the gasket and the outside of the spigot prior to entering the spigot into the bell.

f. When using a field cut plain end piece of pipe, refinished the field cut and scarf to conform to AWWA M-41.

3. Flanged Joints

a. Use erection bolts and drift pins to make flanged connections.

1) Do not use undue force or restraint on the ends of the fittings.
2) Apply even and uniform pressure to the gasket.

b. The fitting must be free to move in any direction while bolting.

1) Install flange bolts with all bolt heads faced in 1 direction.

4. Joint Deflection

a. Deflect the pipe only when necessary to avoid obstructions or to meet the lines and grades and shown in the Drawings.
b. The deflection of each joint must be in accordance with AWWA C600 Table 3.
c. The maximum deflection allowed is 50 percent of that indicated in AWWA C600.
d. The manufacturer's recommendation may be used with the approval of the Engineer.

C. Polyethylene Encasement Installation

1. Preparation

a. Remove all lumps of clay, mud, cinders, etc., on fittings surface prior to installation of polyethylene encasement.

1) Prevent soil or embedment material from becoming trapped between fittings and polyethylene.

b. Fit polyethylene film to contour of fittings to affect a snug, but not tight encase with minimum space between polyethylene and fittings.

1) Provide sufficient slack in contouring to prevent stretching polyethylene where it bridges irregular surfaces such as bell-spigot interfaces, bolted joints or fittings, and to prevent damage to polyethylene due to backfilling operations.
2) Secure overlaps and ends with adhesive tape and hold.

c. For installations below water table and/or in areas subject to tidal actions, seal both ends of polyethylene tube with adhesive tape at joint overlap.

2. Tubular Type (Method A)

a. Cut polyethylene tube to length approximately 2 feet longer than fittings section.
b. Slip tube around fittings, centering it to provide 1 foot overlap on each adjacent pipe section and bunching it accordion-fashion lengthwise until it clears fittings ends.
c. Lower fittings into trench with preceding section of pipe.
d. Make shallow bell hole at joints to facilitate installation of polyethylene tube.
e. After assembling fittings make overlap of polyethylene tube, pull bunched polyethylene from preceding length of pipe, slip it over end of the fitting and wrap until it overlaps joint at end of preceding length of pipe.
f. Secure overlap in place.
g. Take up slack width at top of fitting to make a snug, but not tight, fit along barrel of fitting, securing fold at quarter points.
h. Repair cuts, tears, punctures or other damage to polyethylene.
i. Proceed with installation of next fitting in same manner.

3. Tubular Type (Method B)

a. Cut polyethylene tube to length approximately 1 foot shorter than fitting section.

b. Slip tube around fitting, centering it to provide 6 inches of bare fitting at each end.
c. Take up slack width at top of fitting to make a snug, but not tight, fit along barrel of fitting, securing fold at quarter points; secure ends.
d. Before making up joint, slip 3-foot length of polyethylene tube over end of proceeding pipe section, bunching it accordion-fashion lengthwise.
e. After completing joint, pull 3-foot length of polyethylene over joint, overlapping polyethylene previously installed on each adjacent section of pipe by at least 1 foot; make each end snug and secure.

4. Sheet Type

a. Cut polyethylene sheet to a length approximately 2 feet longer than piece section.
b. Center length to provide 1-foot overlap on each fitting, bunching it until it clears the fitting ends.
c. Wrap polyethylene around fitting so that it circumferentially overlaps top quadrant of fitting.
d. Secure cut edge of polyethylene sheet at intervals of approximately 3 feet.
e. Lower wrapped fitting into trench with preceding section of pipe.
f. Make shallow bell hole at joints to facilitate installation of polyethylene.
g. After completing joint, make overlap and secure ends.
h. Repair cuts, tears, punctures or other damage to polyethylene.
i. Proceed with installation of fittings in same manner.

5. Pipe-Shaped Appurtenances

a. Cover bends, reducers, offsets, and other pipe-shaped appurtenances with polyethylene in same manner as pipe and fittings.

6. Odd-Shaped Appurtenances

a. When it is not practical to wrap valves, tees, crosses and other odd-shaped pieces in tube, wrap with flat sheet or split length polyethylene tube by passing sheet under appurtenances and bringing it up around body.
b. Make seams by bringing edges together, folding over twice and taping down.
c. Tape polyethylene securely in place at the valve stem and at any other penetrations.

7. Repairs

a. Repair any cuts, tears, punctures or damage to polyethylene with adhesive tape or with short length of polyethylene sheet or cut open tube, wrapped around fitting to cover damaged area, and secure in place.

8. Openings in Encasement

a. Provide openings for branches, service taps, blow-offs, air valves and similar appurtenances by making an X-shaped cut in polyethylene and temporarily folding back film.
b. After appurtenance is installed, tape slack securely to appurtenance and repair cut, as well as other damaged area in polyethylene with tape.
c. Service taps may also be made directly through polyethylene, with any resulting damaged areas being repaired as described above.

9. Junctions between Wrapped and Unwrapped Fittings

a. Where polyethylene-wrapped fitting joins an adjacent pipe that is not wrapped, extend polyethylene wrap to cover adjacent pipe for distance of at least 3 feet.
b. Secure end with circumferential turns of tape.

c. Wrap service lines of dissimilar metals with polyethylene or suitable dielectric tape for minimum clear distance of 3 feet away from cast or Ductile Iron Fittings.

D. Blocking

1. Install concrete blocking in accordance with Section 03 30 00 for all bends, tees, crosses and plugs in the pipe lines as indicated in the Drawings.
2. Place the concrete blocking so as to rest against firm undisturbed trench walls, normal to the thrust.
3. The supporting area for each block shall be at least as great as that indicated on the Drawings and shall be sufficient to withstand the thrust, including water hammer, which may develop.
4. Each block shall rest on a firm, undisturbed foundation or trench bottom.
5. If the Contractor encounters soil that appears to be different than that which was used to calculate the blocking according to the Drawings, the Contractor shall notify the Engineer prior to the installation of the blocking.

3.2 REPAIR/RESTORATION

A. Patching

1. Excessive field-patching is not permitted of lining or coating.
2. Patching of lining or coating will be allowed where area to be repaired does not exceed 100 square inches and has no dimensions greater than 12 inches.
3. In general, there shall not be more than 1 patch on either the lining or the coating of any fitting.
4. Wherever necessary to patch the fitting:

   a. Make patch with cement mortar as previously specified for interior joints.
   b. Do not install patched fitting until the patch has been properly and adequately cured and approved for laying by the Owner.
   c. Promptly remove rejected fittings from the site.

END OF SECTION

THIS PAGE LEFT INTENTIONALLY BLANK

EXHIBIT B

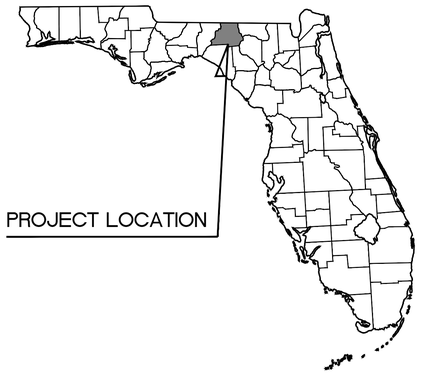

PERMIT DRAWINGS

WATER PLANT UPGRADES FUNDED BY FDACS PURE WATER, BRIGHT FUTURE

GREENVILLE, FLORIDA

PREPARED FOR:

TOWN OF GREENVILLE

MAY 2026

PROJECT AREA

VICINITY MAP

NTS

NORTH

Sheet List Table	
Sheet Number	Sheet Title
C000	COVER SHEET
C100	GENERAL NOTES
C200	EXISTING CONDITIONS
C300	DEMOLITION PLAN
C400	SITE PLAN
C500	CONSTRUCTION DETAILS (SHEET 1 OF 3)
C501	CONSTRUCTION DETAILS (SHEET 2 OF 3)
C502	CONSTRUCTION DETAILS (SHEET 3 OF 3)
C503	STRUCTURAL DETAILS

DESIGN CONTACTS

OWNER:
TOWN OF GREENVILLE
154 SW OLD MISSION AVE
P.O. BOX 235
GREENVILLE, FL 32331

CIVIL ENGINEER:
KIMLEY-HORN AND ASSOCIATES, INC.
2619 CENTENNIAL BOULEVARD, SUITE 200
TALLAHASSEE, FL 32308
CONTACT: FELICITY J. APPEL, P.E.
PHONE: (850) 553-3500

SURVEYOR:
S. STINSON & ASSOCIATES, INC.
147 JOHNNY RD.
LAMONT, FL 32336
PHONE: (850) 509-3116

UTILITY PROVIDERS

WATER + SEWER:
TOWN OF GREENVILLE
154 SW OLD MISSION AVE
P.O. BOX 235
GREENVILLE, FL 32331

ELECTRIC:
TRI COUNTY ELECTRIC COOP
2862 W. US HIGHWAY 90
MADISON, FL 32340
PHONE: (850) 973-8023

TELECOMMUNICATIONS:
CENTURY LINK
510 N GRAND ST
GREENVILLE, FL 32331
CONTACT: LESTER BEACH
(850) 599-1442

DESIGN STANDARDS:

FHWA PUBLIC RIGHT-OF-WAY ACCESSIBILITY GUIDELINES (PROWAG)
FDEP TEN STATE STANDARDS
FDEP RULE 62-555 F.A.C.

PREPARED BY:

Kimley»Horn

CALL 2 WORKING DAYS BEFORE YOU DIG
IT'S THE LAW! DIAL 811
811 Know what's below. Call before you dig.
SUNSHINE STATE ONE CALL OF FLORIDA, INC.

This document, together with the concepts and designs presented herein, as an instrument of service, is intended only for the specific purpose and client for which it was prepared. Reuse of and improper reliance on this document without written authorization and adaptation by Kimley-Horn and Associates, Inc. shall be without liability to Kimley-Horn and Associates, Inc.

No.	REVISIONS	DATE	BY

Kimley»Horn
© 2026 KIMLEY-HORN AND ASSOCIATES, INC.
2619 CENTENNIAL BLVD, SUITE 200, TALLAHASSEE, FL 32308
PHONE: 850-553-3500 FAX: 561-863-8175
WWW.KIMLEY-HORN.COM

LICENSED PROFESSIONAL
DATE:

KHA PROJECT 142840020
DATE MAY 2026
SCALE AS SHOWN
DESIGNED BY CLL
DRAWN BY ACS
CHECKED BY FJA

COVER SHEET

WATER PLANT UPGRADES FUNDED BY FDACS PURE WATER, BRIGHT FUTURE
PREPARED FOR
TOWN OF GREENVILLE
GREENVILLE FLORIDA

SHEET NUMBER
C000

Drawing name: K:\TAL_Utilities\01_Production\142840 - Town of Greenville\020 - Water Filter Replacement\Design\CADD\PlanSheets\C200 - GENERAL NOTES.dwg GENERAL NOTES May 06, 2026 3:17pm by: Allie.Scheel
This document, together with the concepts and designs presented herein, as an instrument of service, is intended only for the specific purpose and client for which it was prepared. Reuse of and improper reliance on this document without written authorization and adaptation by Kimley-Horn and Associates, Inc. shall be without liability to Kimley-Horn and Associates, Inc.

GENERAL CONSTRUCTION NOTES

1. THE CONTRACTOR AND SUBCONTRACTORS SHALL OBTAIN A COPY OF THE FLORIDA DEPARTMENT OF TRANSPORTATION "STANDARD SPECIFICATIONS FOR ROAD AND BRIDGE CONSTRUCTION" (LATEST EDITION) AND BECOME FAMILIAR WITH THE CONTENTS PRIOR TO COMMENCING WORK, AND, UNLESS OTHERWISE NOTED, ALL WORK SHALL CONFORM AS APPLICABLE TO THESE STANDARDS AND SPECIFICATIONS.
2. THE CONTRACTOR SHALL BE RESPONSIBLE FOR FURNISHING ALL MATERIAL AND LABOR TO CONSTRUCT THE FACILITY AS SHOWN AND DESCRIBED IN THE CONSTRUCTION DOCUMENTS IN ACCORDANCE WITH THE APPROPRIATE APPROVING AUTHORITIES, SPECIFICATIONS AND REQUIREMENTS. CONTRACTOR SHALL CLEAR AND GRUB ALL AREAS UNLESS OTHERWISE INDICATED, REMOVING TREES, STUMPS, ROOTS, MUCK, EXISTING PAVEMENT AND ALL OTHER DELETERIOUS MATERIAL.
3. EXISTING UTILITIES SHOWN ARE LOCATED ACCORDING TO THE INFORMATION AVAILABLE TO THE ENGINEER AT THE TIME OF THE TOPOGRAPHIC SURVEY AND HAVE NOT BEEN INDEPENDENTLY VERIFIED BY THE OWNER OR THE ENGINEER. GUARANTEE IS NOT MADE THAT ALL EXISTING UNDERGROUND UTILITIES ARE SHOWN OR THAT THE LOCATION OF THOSE SHOWN ARE ENTIRELY ACCURATE. FINDING THE ACTUAL LOCATION OF ANY EXISTING UTILITIES IS THE CONTRACTOR'S RESPONSIBILITY AND SHALL BE DONE BEFORE COMMENCING ANY WORK IN THE VICINITY. FURTHERMORE, THE CONTRACTOR SHALL BE FULLY RESPONSIBLE FOR ANY AND ALL DAMAGES DUE TO THE CONTRACTOR'S FAILURE TO EXACTLY LOCATE AND PRESERVE ANY AND ALL UNDERGROUND UTILITIES. THE OWNER OR ENGINEER WILL ASSUME NO LIABILITY FOR ANY DAMAGES SUSTAINED OR COST INCURRED BECAUSE OF THE OPERATIONS IN THE VICINITY OF EXISTING UTILITIES OR STRUCTURES, NOR FOR TEMPORARY BRACING AND SHORING OF SAME. IF IT IS NECESSARY TO SHORE, BRACE, SWING OR RELOCATE A UTILITY, THE UTILITY COMPANY OR DEPARTMENT AFFECTED SHALL BE CONTACTED AND THEIR PERMISSION OBTAINED REGARDING THE METHOD TO USE FOR SUCH WORK.
4. IT IS THE CONTRACTOR'S RESPONSIBILITY TO CONTACT THE VARIOUS UTILITY COMPANIES WHICH MAY HAVE BURIED OR AERIAL UTILITIES WITHIN OR NEAR THE CONSTRUCTION AREA BEFORE COMMENCING WORK. THE CONTRACTOR SHALL PROVIDE 48 HOURS MINIMUM NOTICE TO ALL UTILITY COMPANIES PRIOR TO BEGINNING CONSTRUCTION. AN APPROXIMATE LIST OF THE UTILITY COMPANIES WHICH THE CONTRACTOR MUST CALL BEFORE COMMENCING WORK IS PROVIDED ON THE COVER SHEET OF THESE CONSTRUCTION PLANS. THIS LIST SERVES AS A GUIDE ONLY AND IS NOT INTENDED TO LIMIT THE UTILITY COMPANIES WHICH THE CONTRACTOR MAY NEED TO NOTIFY.
5. THE CONTRACTOR SHALL BE RESPONSIBLE FOR OBTAINING ALL REQUIRED CONSTRUCTION PERMITS AND BONDS IF REQUIRED PRIOR TO CONSTRUCTION.
6. THE CONTRACTOR SHALL HAVE AVAILABLE AT THE JOB SITE AT ALL TIMES ONE COPY OF THE CONSTRUCTION DOCUMENTS INCLUDING PLANS, SPECIFICATIONS, GEOTECHNICAL REPORT AND SPECIAL CONDITIONS AND COPIES OF ANY REQUIRED CONSTRUCTION PERMITS.
7. ANY DISCREPANCIES ON THE DRAWINGS SHALL BE IMMEDIATELY BROUGHT TO THE ATTENTION OF THE OWNER AND ENGINEER BEFORE COMMENCING WORK. NO FIELD CHANGES OR DEVIATIONS FROM DESIGN ARE TO BE MADE WITHOUT PRIOR WRITTEN APPROVAL OF THE OWNER AND NOTIFICATION TO THE ENGINEER.
8. ALL COPIES OF COMPACTION, CONCRETE AND OTHER REQUIRED TEST RESULTS ARE TO BE SENT TO THE OWNER AND DESIGN ENGINEER OF RECORD DIRECTLY FROM THE TESTING AGENCY.
9. THE CONTRACTOR SHALL BE RESPONSIBLE FOR SUBMITTING TO THE ENGINEER A CERTIFIED RECORD SURVEY SIGNED AND SEALED BY A PROFESSIONAL LAND SURVEYOR REGISTERED IN THE STATE OF FLORIDA DEPICTING THE ACTUAL FIELD LOCATION OF ALL CONSTRUCTED IMPROVEMENTS THAT ARE REQUIRED BY THE JURISDICTIONAL AGENCIES FOR THE CERTIFICATION PROCESS. ALL SURVEY COSTS WILL BE THE CONTRACTORS RESPONSIBILITY.
10. THE CONTRACTOR SHALL BE RESPONSIBLE FOR DOCUMENTING AND MAINTAINING AS-BUILT INFORMATION WHICH SHALL BE RECORDED AS CONSTRUCTION PROGRESSES OR AT THE COMPLETION OF APPROPRIATE CONSTRUCTION INTERVALS AND SHALL BE RESPONSIBLE FOR PROVIDING AS-BUILT DRAWINGS TO THE OWNER FOR THE PURPOSE OF CERTIFICATION TO JURISDICTIONAL AGENCIES AS REQUIRED. ALL AS-BUILT DATA SHALL BE COLLECTED BY A STATE OF FLORIDA PROFESSIONAL LAND SURVEYOR WHOSE SERVICES ARE ENGAGED BY THE CONTRACTOR.
11. ANY WELLS DISCOVERED ON SITE THAT WILL HAVE NO USE MUST BE PROPERLY ABANDONED BY A LICENSED WELL DRILLING CONTRACTOR IN A MANNER APPROVED BY ALL JURISDICTIONAL AGENCIES. CONTRACTOR SHALL BE RESPONSIBLE FOR OBTAINING ANY WELL ABANDONMENT PERMITS REQUIRED.
12. ANY WELL DISCOVERED DURING EARTH MOVING OR EXCAVATION SHALL BE REPORTED TO THE APPROPRIATE JURISDICTIONAL AGENCIES WITHIN 24 HOURS AFTER DISCOVERY IS MADE.
13. THE CONTRACTOR SHALL BE RESPONSIBLE FOR VERIFYING THAT THE PROPOSED IMPROVEMENTS SHOWN ON THE PLANS DO NOT CONFLICT WITH ANY KNOWN EXISTING OR OTHER PROPOSED IMPROVEMENTS. IF ANY CONFLICTS ARE DISCOVERED, THE CONTRACTOR SHALL NOTIFY THE OWNER PRIOR TO INSTALLATION OF ANY PORTION OF THE SITE WORK THAT WOULD BE AFFECTED. FAILURE TO NOTIFY OWNER OF AN IDENTIFIABLE CONFLICT PRIOR TO PROCEEDING WITH INSTALLATION RELIEVES OWNER OF ANY OBLIGATION TO PAY FOR A RELATED CHANGE ORDER.
14. ANY CONSTRUCTION ADJACENT TO A WETLAND AREA SHALL BE PERFORMED FROM THE UPLAND SIDE OF THE AREA. CONSTRUCTION ENCROACHMENT INTO A WETLAND AREA IS NOT ALLOWED UNLESS PERMITTED BY THE JURISDICTIONAL AGENCY.
15. TRAFFIC CONTROL SHALL BE IN ACCORDANCE WITH THE CURRENT FDOT DESIGN STANDARD INDEX (SERIES 600) AND THE MANUAL ON UNIFORM TRAFFIC CONTROL DEVICES.
16. THE CONTRACTOR SHALL FIELD LOCATE ALL SEPTIC TANKS PRIOR TO CONNECTION.

DEMOLITION NOTES

1. ALL MATERIAL REMOVED FROM THIS SITE BY THE CONTRACTOR SHALL BE DISPOSED OF BY THE CONTRACTOR IN A LEGAL MANNER.
2. REFER TO THE TOPOGRAPHIC SURVEY FOR ADDITIONAL DETAILS OF EXISTING STRUCTURES, ETC., LOCATED WITHIN THE PROJECT SITE. UNLESS OTHERWISE NOTED, ALL EXISTING BUILDINGS, STRUCTURES, SLABS, CONCRETE, ASPHALT, DEBRIS PILES, SIGNS, AND ALL APPURTENANCES ARE TO BE REMOVED FROM THE SITE BY THE CONTRACTOR AND PROPERLY DISPOSED OF IN A LEGAL MANNER AS PART OF THIS CONTRACT. SOME ITEMS TO BE REMOVED MAY NOT BE DEPICTED ON THE TOPOGRAPHIC SURVEY. IT IS THE CONTRACTORS RESPONSIBILITY TO VISIT THE SITE AND DETERMINE THE FULL EXTENT OF ITEMS TO BE REMOVED. IF ANY ITEMS ARE IN QUESTION, THE CONTRACTOR SHALL CONTACT THE OWNER PRIOR TO REMOVAL OF SAID ITEMS.
3. THE CONTRACTOR SHALL REFER TO THE DEMOLITION PLAN AND TREE INVENTORY PLAN FOR DEMOLITION/PRESERVATION OF EXISTING TREES. ALL TREES NOT SPECIFICALLY SHOWN TO BE PRESERVED OR RELOCATED SHALL BE REMOVED AS A PART OF THIS CONTRACT. TREE PROTECTION FENCING SHALL BE INSTALLED PRIOR TO ANY DEMOLITION.
4. CONTRACTOR SHALL ADJUST GRADE OF ANY EXISTING UTILITIES TO REMAIN TO MATCH EXISTING SLOPE.
5. CONTRACTOR IS REQUIRED TO OBTAIN ALL DEMOLITION PERMITS.

RECORD DRAWINGS

1. CONTRACTOR SHALL PROVIDE TO THE ENGINEER AND OWNER A MINIMUM OF 1 PDF OF A PAVING, GRADING AND DRAINAGE RECORD DRAWING AND A SEPARATE UTILITY RECORD DRAWING, AS WELL AS BOTH IN AUTOCAD 2015 OR LATER, BOTH PREPARED BY A FLORIDA REGISTERED SURVEYOR. THE RECORD DRAWINGS SHALL VERIFY ALL DESIGN INFORMATION INCLUDED ON THE DESIGN PLANS OF THE SAME NAME.

PAVING, GRADING AND DRAINAGE NOTES

1. ALL PAVING, CONSTRUCTION, MATERIALS, AND WORKMANSHIP WITHIN JURISDICTION'S RIGHT-OF-WAY SHALL BE IN ACCORDANCE WITH LOCAL OR COUNTY SPECIFICATIONS AND STANDARDS (LATEST EDITION) OR FDOT SPECIFICATIONS AND STANDARD PLANS (LATEST EDITION) IF NOT COVERED BY LOCAL OR COUNTY REGULATIONS.
2. ALL UNPAVED AREAS IN EXISTING RIGHTS-OF-WAY DISTURBED BY CONSTRUCTION SHALL BE REGRADED AND SODDED.
3. TRAFFIC CONTROL ON ALL FDOT, LOCAL AND COUNTY RIGHTS-OF-WAY SHALL MEET THE REQUIREMENTS OF THE MANUAL OF UNIFORM TRAFFIC CONTROL DEVICES (U.S. DOT/FHA) AND THE REQUIREMENTS OF THE STATE AND ANY LOCAL AGENCY HAVING JURISDICTION. IN THE EVENT THAT THE CONTRACT DOCUMENTS AND THE JURISDICTIONAL AGENCY REQUIREMENTS ARE NOT IN AGREEMENT, THE MOST STRINGENT SHALL GOVERN.
4. THE CONTRACTOR SHALL GRADE THE SITE TO THE ELEVATIONS INDICATED AND SHALL REGRADE WASHOUTS WHERE THEY OCCUR AFTER EVERY RAINFALL UNTIL A GRASS STAND IS WELL ESTABLISHED OR ADEQUATE STABILIZATION OCCURS.
5. ALL OPEN AREAS WITHIN THE PROJECT SITE SHALL BE SODDED UNLESS INDICATED OTHERWISE ON THE LANDSCAPE PLAN.
6. ALL AREAS INDICATED AS PAVEMENT SHALL BE CONSTRUCTED IN ACCORDANCE WITH THE TYPICAL PAVEMENT SECTIONS AS INDICATED ON THE DRAWINGS.
7. WHERE EXISTING PAVEMENT IS INDICATED TO BE REMOVED AND REPLACED, THE CONTRACTOR SHALL SAW CUT A MINIMUM 2 INCHES DEEP FOR A SMOOTH AND STRAIGHT JOINT AND REPLACE THE PAVEMENT WITH THE SAME TYPE AND DEPTH OF MATERIAL AS EXISTING OR AS INDICATED.
8. WHERE NEW PAVEMENT MEETS THE EXISTING PAVEMENT, THE CONTRACTOR SHALL SAW CUT THE EXISTING PAVEMENT A MINIMUM 2 INCHES DEEP FOR A SMOOTH AND STRAIGHT JOINT AND MATCH THE EXISTING PAVEMENT ELEVATION WITH THE PROPOSED PAVEMENT UNLESS OTHERWISE INDICATED.
9. THE CONTRACTOR SHALL INSTALL FILTER FABRIC OVER ALL DRAINAGE STRUCTURES FOR THE DURATION OF CONSTRUCTION AND UNTIL ACCEPTANCE OF THE PROJECT BY THE OWNER. ALL DRAINAGE STRUCTURES SHALL BE CLEANED OF SILT AND DEBRIS AS REQUIRED DURING AND AT THE END OF CONSTRUCTION TO PROVIDE POSITIVE DRAINAGE FLOWS.
10. IF DEWATERING IS REQUIRED, THE CONTRACTOR SHALL OBTAIN ANY APPLICABLE REQUIRED PERMITS. THE CONTRACTOR IS TO COORDINATE WITH THE OWNER AND THE DESIGN ENGINEER PRIOR TO ANY EXCAVATION.
11. STRIP TOPSOIL AND ORGANIC MATTER FROM ALL AREAS OF THE SITE AS REQUIRED. IN SOME CASES TOPSOIL MAY BE STOCKPILED ON SITE FOR PLACEMENT WITHIN LANDSCAPED AREAS BUT ONLY AS DIRECTED BY THE OWNER AND APPROVED BY THE MADISON COUNTY ENVIRONMENTAL INSPECTOR.
12. FIELD DENSITY TESTS SHALL BE TAKEN AT INTERVALS IN ACCORDANCE WITH THE LOCAL JURISDICTIONAL AGENCY OR TO FDOT STANDARDS. IN THE EVENT THAT THE CONTRACT DOCUMENTS AND THE JURISDICTIONAL AGENCY REQUIREMENTS ARE NOT IN AGREEMENT, THE MOST STRINGENT SHALL GOVERN.
13. ALL SLOPES AND AREAS DISTURBED BY CONSTRUCTION SHALL BE GRADED AS PER PLANS. THE AREAS SHALL THEN BE SODDED OR SEEDED AS SPECIFIED IN THE PLANS, FERTILIZED, MULCHED, WATERED AND MAINTAINED UNTIL HARDY GRASS GROWTH IS ESTABLISHED IN ALL AREAS. ANY AREAS DISTURBED FOR ANY REASON PRIOR TO FINAL ACCEPTANCE OF THE JOB SHALL BE CORRECTED BY THE CONTRACTOR AT NO ADDITIONAL COST TO THE OWNER. ALL EARTHEN AREAS WILL BE SODDED OR SEEDED AND MULCHED AS SHOWN ON THE LANDSCAPING PLAN.
14. ALL CUT OR FILL SLOPES SHALL BE 3 (HORIZONTAL) :1 (VERTICAL) OR FLATTER UNLESS OTHERWISE SHOWN.
15. THE CONTRACTOR SHALL BE RESPONSIBLE FOR THE CONTROL OF DUST AND DIRT RISING AND SCATTERING IN THE AIR DURING CONSTRUCTION AND SHALL PROVIDE WATER SPRINKLING OR OTHER SUITABLE METHODS OF CONTROL. THE CONTRACTOR SHALL COMPLY WITH ALL GOVERNING REGULATIONS PERTAINING TO ENVIRONMENTAL PROTECTION.
16. THE CONTRACTOR SHALL TAKE ALL REQUIRED MEASURES TO CONTROL TURBIDITY, INCLUDING BUT NOT LIMITED TO THE INSTALLATION OF TURBIDITY BARRIERS AT ALL LOCATIONS WHERE THE POSSIBILITY OF TRANSFERRING SUSPENDED SOLIDS INTO THE RECEIVING WATER BODY EXISTS DUE TO THE PROPOSED WORK OR ANY OTHER AREAS AS INDICATED BY THE MADISON COUNTY ENVIRONMENTAL INSPECTOR. TURBIDITY BARRIERS MUST BE MAINTAINED IN EFFECTIVE CONDITION AT ALL LOCATIONS UNTIL CONSTRUCTION IS COMPLETED AND DISTURBED SOIL AREAS ARE STABILIZED. THEREAFTER, THE CONTRACTOR MUST REMOVE THE BARRIERS. AT NO TIME SHALL THERE BE ANY OFF-SITE DISCHARGE WHICH VIOLATES THE WATER QUALITY STANDARDS IN CHAPTER 17-302, FLORIDA ADMINISTRATIVE CODE.
17. SOD, WHERE CALLED FOR, MUST BE INSTALLED AND MAINTAINED ON EXPOSED SLOPES WITHIN 48 HOURS OF COMPLETING FINAL GRADING, AND AT ANY OTHER TIME AS NECESSARY, TO PREVENT EROSION, SEDIMENTATION OR TURBID DISCHARGES.
18. THE CONTRACTOR MUST REVIEW AND MAINTAIN A COPY OF THE ENVIRONMENTAL RESOURCE PERMIT COMPLETE WITH ALL CONDITIONS, ATTACHMENTS, EXHIBITS, AND PERMIT MODIFICATIONS IN GOOD CONDITION AT THE CONSTRUCTION SITE. THE COMPLETE PERMIT MUST BE AVAILABLE FOR REVIEW UPON REQUEST BY WATER MANAGEMENT DISTRICT REPRESENTATIVES, OR ANY OTHER REGULATORY AGENCY WHOSE JURISDICTION COVERS THIS PROJECT SITE.
19. THE CONTRACTOR SHALL ENSURE THAT ISLAND PLANTING AREAS AND OTHER PLANTING AREAS ARE NOT COMPACTED AND DO NOT CONTAIN ROAD BASE MATERIALS. THE CONTRACTOR SHALL ALSO EXCAVATE AND REMOVE ALL UNDESIRABLE MATERIAL FROM ALL AREAS ON THE SITE TO BE PLANTED AND PROPERLY DISPOSED OF IN A LEGAL MANNER.
20. THE CONTRACTOR SHALL INSTALL ALL UNDERGROUND SANITARY SEWER PIPING PER MANUFACTURER'S RECOMMENDATIONS.

MAINTENANCE

1. ALL MEASURES STATED ON THE EROSION AND SEDIMENT CONTROL PLAN, AND IN THE STORM WATER POLLUTION PREVENTION PLAN, SHALL BE MAINTAINED IN FULLY FUNCTIONAL CONDITION UNTIL NO LONGER REQUIRED FOR A COMPLETED PHASE OF WORK OR FINAL STABILIZATION OF THE SITE. ALL EROSION AND SEDIMENTATION CONTROL MEASURES SHALL BE CHECKED BY A QUALIFIED PERSON AT LEAST ONCE EVERY SEVEN CALENDAR DAYS AND WITHIN 24 HOURS OF THE END OF A 0.5" RAINFALL EVENT OR GREATER, AND CLEANED AND REPAIRED IN ACCORDANCE WITH THE FOLLOWING:

a. INLET PROTECTION DEVICES AND BARRIERS SHALL BE REPAIRED OR REPLACED IF THEY SHOW SIGNS OF UNDERMINING, OR DETERIORATION.
b. ALL SEEDED AREAS SHALL BE CHECKED REGULARLY TO SEE THAT A GOOD STAND IS MAINTAINED. AREAS SHOULD BE FERTILIZED, WATERED AND RESEEDED AS NEEDED. FOR MAINTENANCE REQUIREMENTS REFER TO SECTION 981 OF THE STANDARD SPECIFICATIONS.
c. SILT FENCES SHALL BE REPAIRED TO THEIR ORIGINAL CONDITIONS IF DAMAGED. SEDIMENT SHALL BE REMOVED FROM THE SILT FENCES WHEN IT REACHES ONE-HALF THE HEIGHT OF THE SILT FENCE.
d. THE CONSTRUCTION ENTRANCES SHALL BE MAINTAINED IN A CONDITION WHICH WILL PREVENT TRACKING OR FLOW OF MUD ONTO PUBLIC RIGHTS-OF-WAY. THIS MAY REQUIRE PERIODIC TOP DRESSING OF THE CONSTRUCTION ENTRANCES AS CONDITIONS DEMAND.
e. THE TEMPORARY PARKING AND STORAGE AREA SHALL BE KEPT IN GOOD CONDITION (SUITABLE FOR PARKING AND STORAGE). THIS MAY REQUIRE PERIODIC TOP DRESSING OF THE TEMPORARY PARKING AS CONDITIONS DEMAND.
f. OUTLET STRUCTURES IN THE SEDIMENTATION BASINS SHALL BE MAINTAINED IN OPERATIONAL CONDITIONS AT ALL TIMES. SEDIMENT SHALL BE REMOVED FROM SEDIMENT BASINS OR TRAPS WHEN THE DESIGN CAPACITY HAS BEEN REDUCED BY 55 CUBIC YARDS / ACRE.
g. ALL MAINTENANCE OPERATIONS SHALL BE DONE IN A TIMELY MANNER BUT IN NO CASE LATER THAN 2 CALENDAR DAYS FOLLOWING THE INSPECTION.

WATER UTILITY NOTES

1. ALL EXISTING UNDERGROUND UTILITY LOCATIONS SHOWN ARE APPROXIMATE. THE CONTRACTOR SHALL COMPLY WITH ALL REQUIREMENTS FOR UTILITY LOCATION AND COORDINATION IN ACCORDANCE WITH THE NOTES CONTAINED IN THESE PLANS.
2. THE CONTRACTOR SHALL RESTORE ALL DISTURBED VEGETATION IN KIND, UNLESS SHOWN OTHERWISE.
3. DEFLECTION OF PIPE JOINTS AND CURVATURE OF PIPE SHALL NOT EXCEED THE MANUFACTURER'S SPECIFICATIONS. SECURELY CLOSE ALL OPEN ENDS OF PIPE AND FITTINGS WITH A WATERTIGHT PLUG WHEN WORK IS NOT IN PROGRESS. THE INTERIOR OF ALL PIPES SHALL BE CLEAN AND JOINT SURFACES WIPED CLEAN AND DRY AFTER THE PIPE HAS BEEN LOWERED INTO THE TRENCH. VALVES SHALL BE PLUMB AND LOCATED ACCORDING TO THE PLANS.
4. ALL PHASES OF INSTALLATION, INCLUDING UNLOADING, TRENCHING, LAYING, AND BACK FILLING, SHALL BE DONE IN A FIRST CLASS WORKMANLIKE MANNER. ALL PIPE AND FITTINGS SHALL BE CAREFULLY STORED FOLLOWING MANUFACTURER'S RECOMMENDATIONS. CARE SHALL BE TAKEN TO AVOID DAMAGE TO THE COATING OR LINING IN ANY D.I. PIPE FITTINGS. ANY PIPE OR FITTING WHICH IS DAMAGED OR WHICH HAS FLAWS OR IMPERFECTIONS WHICH, IN THE OPINION OF THE ENGINEER OR OWNER, RENDERS IT UNFIT FOR USE, SHALL NOT BE USED. ANY PIPE NOT SATISFACTORY FOR USE SHALL BE CLEARLY MARKED AND IMMEDIATELY REMOVED FROM THE JOB SITE, AND SHALL BE REPLACED AT THE CONTRACTOR'S EXPENSE.
5. WATER FOR FIRE FIGHTING SHALL BE AVAILABLE FOR USE PRIOR TO COMBUSTIBLES BEING BROUGHT ON SITE.
6. ALL UTILITY AND STORM DRAIN TRENCHES LOCATED UNDER AREAS TO RECEIVE PAVING SHALL BE COMPLETELY BACK FILLED IN ACCORDANCE WITH THE GOVERNING JURISDICTIONAL AGENCY'S SPECIFICATIONS. IN THE EVENT THAT THE CONTRACT DOCUMENTS AND THE JURISDICTIONAL AGENCY REQUIREMENTS ARE NOT IN AGREEMENT, THE MOST STRINGENT SHALL GOVERN.
7. UNDERGROUND LINES SHALL BE SURVEYED BY A STATE OF FLORIDA PROFESSIONAL LAND SURVEYOR PRIOR TO BACK FILLING.
8. CONTRACTOR SHALL PERFORM, AT HIS OWN EXPENSE, ANY AND ALL TESTS REQUIRED BY THE SPECIFICATIONS AND/OR ANY AGENCY HAVING JURISDICTION. THESE TESTS MAY INCLUDE, BUT MAY NOT BE LIMITED TO, INFILTRATION AND EXFILTRATION, TELEVISION INSPECTION AND A MANDREL TEST ON GRAVITY SEWER. A COPY OF THE TEST RESULTS SHALL BE PROVIDED TO THE UTILITY PROVIDER, OWNER AND JURISDICTIONAL AGENCY AS REQUIRED.

EROSION CONTROL NOTES

1. BEST MANAGEMENT PRACTICES (BMP'S) AND CONTROLS SHALL CONFORM TO FEDERAL, STATE, OR LOCAL REQUIREMENTS OR MANUAL OF PRACTICE, AS APPLICABLE. THE CONTRACTOR SHALL IMPLEMENT ADDITIONAL CONTROLS AS DIRECTED BY THE PERMITTING AGENCY OR OWNER.
2. PERMITS FOR ANY CONSTRUCTION ACTIVITY IMPACTING STATE WATERS OR REGULATED WETLANDS MUST BE MAINTAINED ON SITE AT ALL TIMES.
3. THE CONTRACTOR SHALL MINIMIZE CLEARING TO THE MAXIMUM EXTENT PRACTICAL OR AS REQUIRED BY THE GENERAL PERMIT.
4. CONTRACTOR SHALL DENOTE ON PLAN THE TEMPORARY PARKING AND STORAGE AREA WHICH SHALL ALSO BE USED AS THE EQUIPMENT MAINTENANCE AND CLEANING AREA, EMPLOYEE PARKING AREA, AND AREA FOR LOCATING PORTABLE FACILITIES, OFFICE TRAILERS, AND TOILET FACILITIES.
5. ALL WASH WATER (CONCRETE TRUCKS, VEHICLE CLEANING, EQUIPMENT CLEANING, ETC.) SHALL BE DETAINED AND PROPERLY TREATED OR DISPOSED.
6. SUFFICIENT OIL AND GREASE ABSORBING MATERIALS AND FLOTATION BOOMS SHALL BE MAINTAINED ON SITE OR READILY AVAILABLE TO CONTAIN AND CLEAN-UP FUEL OR CHEMICAL SPILLS AND LEAKS.
7. THE CONTRACTOR SHALL BE RESPONSIBLE FOR DUST CONTROL ON SITE. THE USE OF MOTOR OILS AND OTHER PETROLEUM BASED OR TOXIC LIQUIDS FOR DUST SUPPRESSION OPERATIONS IS PROHIBITED.
8. RUBBISH, TRASH, GARBAGE, LITTER, OR OTHER SUCH MATERIALS SHALL BE DEPOSITED INTO SEALED CONTAINERS. MATERIALS SHALL BE PREVENTED FROM LEAVING THE PREMISES THROUGH THE ACTION OF WIND OR STORM WATER DISCHARGE INTO DRAINAGE DITCHES OR WATERS OF THE STATE.
9. ALL STORM WATER POLLUTION PREVENTION MEASURES PRESENTED ON THE PLAN, SHALL BE INITIATED AS SOON AS PRACTICABLE.
10. STABILIZATION PRACTICES SHOULD BE INITIATED AS SOON AS PRACTICAL, BUT IN NO CASE MORE THAN 7 DAYS WHERE CONSTRUCTION HAS TEMPORARILY CEASED.
11. DISTURBED PORTIONS OF THE SITE WHERE CONSTRUCTION ACTIVITY HAS PERMANENTLY STOPPED SHALL BE PERMANENTLY SEEDED. THESE AREAS SHALL BE SEEDED NO LATER THAN 7 DAYS AFTER THE LAST CONSTRUCTION ACTIVITY OCCURRED IN THESE AREAS. REFER TO SECTION 981 OF THE STANDARD SPECIFICATIONS FOR SEEDING AND MAINTENANCE REQUIREMENTS.
12. IF THE ACTION OF VEHICLES TRAVELING OVER THE GRAVEL CONSTRUCTION ENTRANCES IS NOT SUFFICIENT TO REMOVE THE MAJORITY OF DIRT OR MUD, THEN THE TIRES MUST BE WASHED BEFORE THE VEHICLES ENTER A PUBLIC ROAD. IF WASHING IS USED, PROVISIONS MUST BE MADE TO INTERCEPT THE WASH WATER AND TRAP THE SEDIMENT BEFORE IT IS CARRIED OFF THE SITE.
13. ALL MATERIALS SPILLED, DROPPED, WASHED, OR TRACKED FROM VEHICLES ONTO ROADWAYS OR INTO STORM DRAINS MUST BE REMOVED AS SOON AS POSSIBLE.
14. THE CONTRACTOR SHALL BE RESPONSIBLE FOR REMOVING SEDIMENT IN THE DETENTION POND AND ANY SEDIMENT THAT MAY HAVE COLLECTED IN THE STORM SEWER DRAINAGE SYSTEMS IN CONJUNCTION WITH THE STABILIZATION OF THE SITE.
15. ON-SITE & OFF SITE SOIL STOCKPILE AND BORROW AREAS SHALL BE PROTECTED FROM EROSION AND SEDIMENTATION THROUGH IMPLEMENTATION OF BEST MANAGEMENT PRACTICES. STOCKPILE AND BORROW AREA LOCATIONS SHALL BE NOTED ON THE EROSION CONTROL PLAN AND PERMITTED IN ACCORDANCE WITH GENERAL PERMIT REQUIREMENTS.
16. SLOPES SHALL BE LEFT IN A ROUGHENED CONDITION DURING THE GRADING PHASE TO REDUCE RUNOFF VELOCITIES AND EROSION.
17. DUE TO GRADE CHANGES DURING THE DEVELOPMENT OF THE PROJECT, THE CONTRACTOR SHALL BE RESPONSIBLE FOR ADJUSTING THE EROSION CONTROL MEASURES (SILT FENCES, ETC.) TO PREVENT EROSION.
18. ALL CONSTRUCTION SHALL BE STABILIZED AT THE END OF EACH WORKING DAY, THIS INCLUDES BACK FILLING OF TRENCHES FOR UTILITY CONSTRUCTION AND PLACEMENT OF GRAVEL OR BITUMINOUS PAVING FOR ROAD CONSTRUCTION.

PROJECT-SPECIFIC NOTES:

1. PIPE PENETRATION THROUGH EXISTING BACKWASH PUMP STATION CONCRETE WETWELL SHALL BE CORE DRILLED PERPENDICULAR TO THE WALL. PROVIDE FLEXIBLE RUBBER BOOT CONNECTIONS (KOR-N-SEAL OR APPROVED EQUAL) SIZED FOR PIPE OUTSIDE DIAMETER AND WALL THICKNESS. CORE DRILL DIAMETER SHALL BE AS REQUIRED BY THE CONNECTOR MANUFACTURER. INSTALLATION SHALL PROVIDE A WATERTIGHT SEAL. GROUT-ONLY OR NON-FLEXIBLE CONNECTIONS SHALL NOT BE PERMITTED.
2. CAST-IN-PLACE CONCRETE SLAB FOR SKID-MOUNTED FILTER SYSTEM SHALL HAVE A MINIMUM COMPRESSIVE STRENGTH OF 4,000 PSI AT 28 DAYS. PROVIDE A 4" PRE-ENGINEERED BACKFILL OVER PREPARED SUBGRADE. SUBGRADE SHALL BE COMPACTED TO A 98% STANDARD PROCTOR DENSITY. PROVIDE LIGHT BROOM FINISH AND SLOPE 1% AWAY FROM EQUIPMENT. PROVIDE ANCHOR BOLTS AS REQUIRED BY EQUIPMENT MANUFACTURER. CONTRACTOR SHALL VERIFY FINAL EQUIPMENT WEIGHT, SKID CONFIGURATION, AND ANCHOR REQUIREMENTS WITH PROPOSED FILTER SYSTEM MANUFACTURER PRIOR TO SLAB CONSTRUCTION. ANY ADDITIONAL STRUCTURAL REQUIREMENTS SHALL BE INSTALLED BY CONTRACTOR AT NO ADDITIONAL COST TO OWNER.
3. CONTRACTOR TO ENSURE MIN. 3' HORIZONTAL SEPARATION AND MIN. 6" VERTICAL SEPARATION BETWEEN ALL EXISTING AND PROPOSED POTABLE WATER LINES AND BACKWASH EFFLUENT LINE.
4. CHLORINE GAS IS USED AT THIS SITE. CONTRACTOR SHALL FIELD VERIFY LOCATIONS OF CHLORINE GAS PIPING PRIOR TO CONSTRUCTION. EXISTING CHLORINE GAS PIPING SHALL NOT BE DISTURBED OR MODIFIED WITHOUT PRIOR APPROVAL FROM ENGINEER.
5. CONTRACTOR TO ONLY USE HAND DIGGING EXCAVATION METHODS IN WORK AREAS FALLING WITHIN 36" OR LESS OF CHLORINE GAS PIPING.

No.	REVISIONS	DATE	BY

Kimley»Horn
© 2026 KIMLEY-HORN AND ASSOCIATES, INC.
2619 CENTENNIAL BLVD, SUITE 200, TALLAHASSEE, FL 32308
PHONE: 850-553-3500 FAX: 561-863-8175
WWW.KIMLEY-HORN.COM

LICENSED PROFESSIONAL
DATE:

KHA PROJECT 142840020
DATE MAY 2026
SCALE AS SHOWN
DESIGNED BY CLL
DRAWN BY ACS
CHECKED BY FJA

GENERAL NOTES

WATER PLANT UPGRADES
FUNDED BY FDACS PURE WATER, BRIGHT FUTURE
PREPARED FOR
TOWN OF GREENVILLE
GREENVILLE FLORIDA

SHEET NUMBER
C100

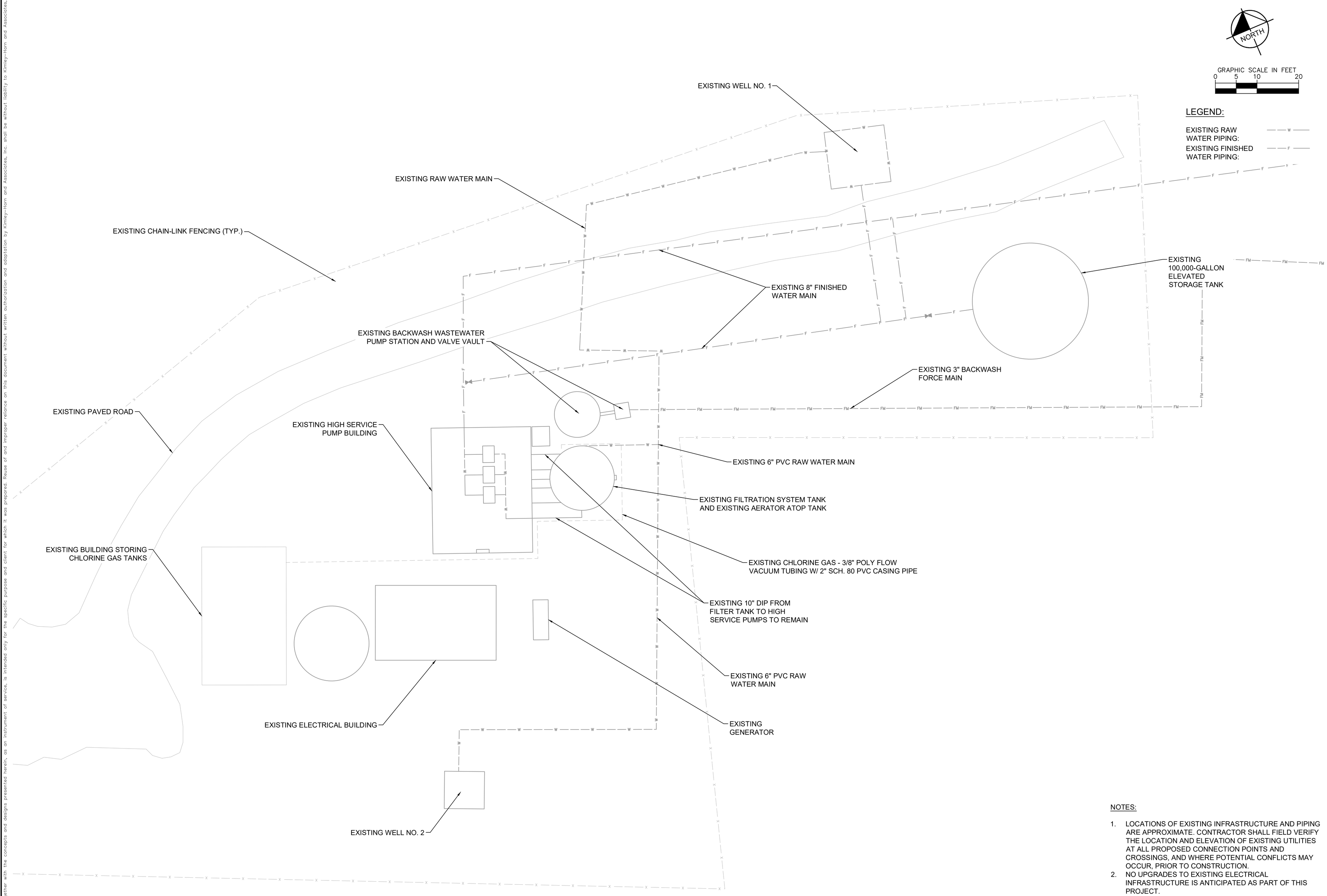

NOTES:

1. LOCATIONS OF EXISTING INFRASTRUCTURE AND PIPING ARE APPROXIMATE. CONTRACTOR SHALL FIELD VERIFY THE LOCATION AND ELEVATION OF EXISTING UTILITIES AT ALL PROPOSED CONNECTION POINTS AND CROSSINGS, AND WHERE POTENTIAL CONFLICTS MAY OCCUR, PRIOR TO CONSTRUCTION.
2. NO UPGRADES TO EXISTING ELECTRICAL INFRASTRUCTURE IS ANTICIPATED AS PART OF THIS PROJECT.
3. CHLORINE GAS IS USED AT THIS SITE. CONTRACTOR SHALL FIELD VERIFY LOCATIONS OF CHLORINE GAS PIPING PRIOR TO CONSTRUCTION. EXISTING CHLORINE GAS PIPING SHALL NOT BE DISTURBED OR MODIFIED WITHOUT PRIOR APPROVAL FROM ENGINEER.

No.	REVISIONS	DATE	BY

Kimley»Horn
© 2026 KIMLEY-HORN AND ASSOCIATES, INC.
2619 CENTENNIAL BLVD, SUITE 200, TALLAHASSEE, FL 32308
PHONE: 850-553-3500 FAX: 561-863-8175
WWW.KIMLEY-HORN.COM

LICENSED PROFESSIONAL

DATE:

KHA PROJECT 142840020
DATE MAY 2026
SCALE AS SHOWN
DESIGNED BY CLL
DRAWN BY ACS
CHECKED BY FJA

EXISTING CONDITIONS

WATER PLANT UPGRADES
FUNDED BY FDACS PURE WATER, BRIGHT FUTURE
PREPARED FOR
TOWN OF GREENVILLE
GREENVILLE FLORIDA

SHEET NUMBER
C200

This document, together with the concepts and designs presented herein, as an instrument of service, is intended only for the specific purpose and client for which it was prepared. Reuse of and improper reliance on this document without written authorization and adaptation by Kimley-Horn and Associates, Inc. shall be without liability to Kimley-Horn and Associates, Inc.

1 EXISTING TANK MODIFICATIONS AND PIPING DEMO

NOT TO SCALE

1 PIPING DEMO CLOSE-UP

NOT TO SCALE

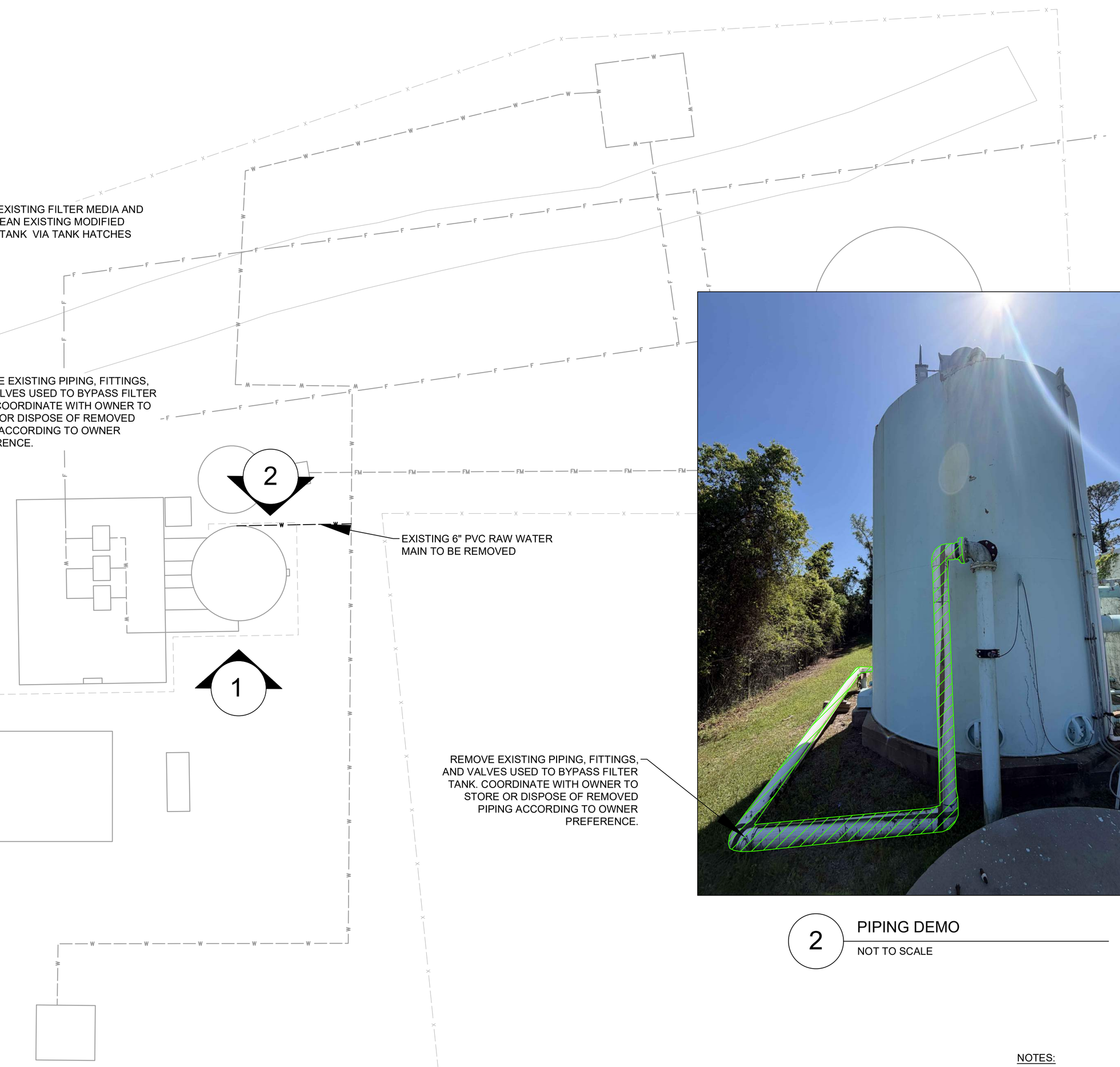

2 PIPING DEMO

NOT TO SCALE

NOTES:

1. LOCATIONS OF EXISTING INFRASTRUCTURE AND PIPING ARE APPROXIMATE. CONTRACTOR SHALL FIELD VERIFY THE LOCATION AND ELEVATION OF EXISTING UTILITIES AT ALL PROPOSED CONNECTION POINTS AND CROSSINGS, AND WHERE POTENTIAL CONFLICTS MAY OCCUR, PRIOR TO CONSTRUCTION.
2. NO UPGRADES TO EXISTING ELECTRICAL INFRASTRUCTURE IS ANTICIPATED AS PART OF THIS PROJECT.
3. CHLORINE GAS IS USED AT THIS SITE. CONTRACTOR SHALL FIELD VERIFY LOCATIONS OF CHLORINE GAS PIPING PRIOR TO CONSTRUCTION. EXISTING CHLORINE GAS PIPING SHALL NOT BE DISTURBED OR MODIFIED WITHOUT PRIOR APPROVAL FROM ENGINEER.

No.	REVISIONS	DATE	BY

Kimley»Horn
© 2026 KIMLEY-HORN AND ASSOCIATES, INC.
2619 CENTENNIAL BLVD, SUITE 200, TALLAHASSEE, FL 32308
PHONE: 850-553-3500 FAX: 561-863-8175
WWW.KIMLEY-HORN.COM

LICENSED PROFESSIONAL

DATE:

KHA PROJECT 142840020
DATE MAY 2026
SCALE AS SHOWN
DESIGNED BY CLL
DRAWN BY ACS
CHECKED BY FJA

DEMOLITION PLAN

WATER PLANT UPGRADES
FUNDED BY FDACS PURE WATER, BRIGHT FUTURE
PREPARED FOR
TOWN OF GREENVILLE

GREENVILLE FLORIDA

SHEET NUMBER
C300

This document, together with the concepts and designs presented herein, as an instrument of service, is intended only for the specific purpose and client for which it was prepared. Reuse of and improper reliance on this document without written authorization and adaptation by Kimley-Horn and Associates, Inc. shall be without liability to Kimley-Horn and Associates, Inc.

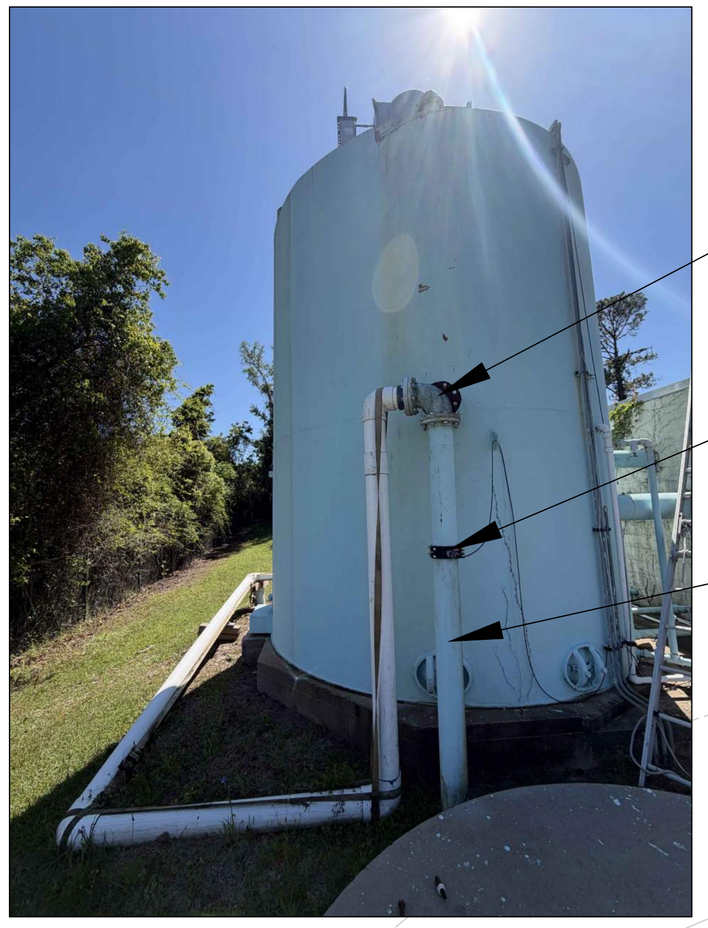

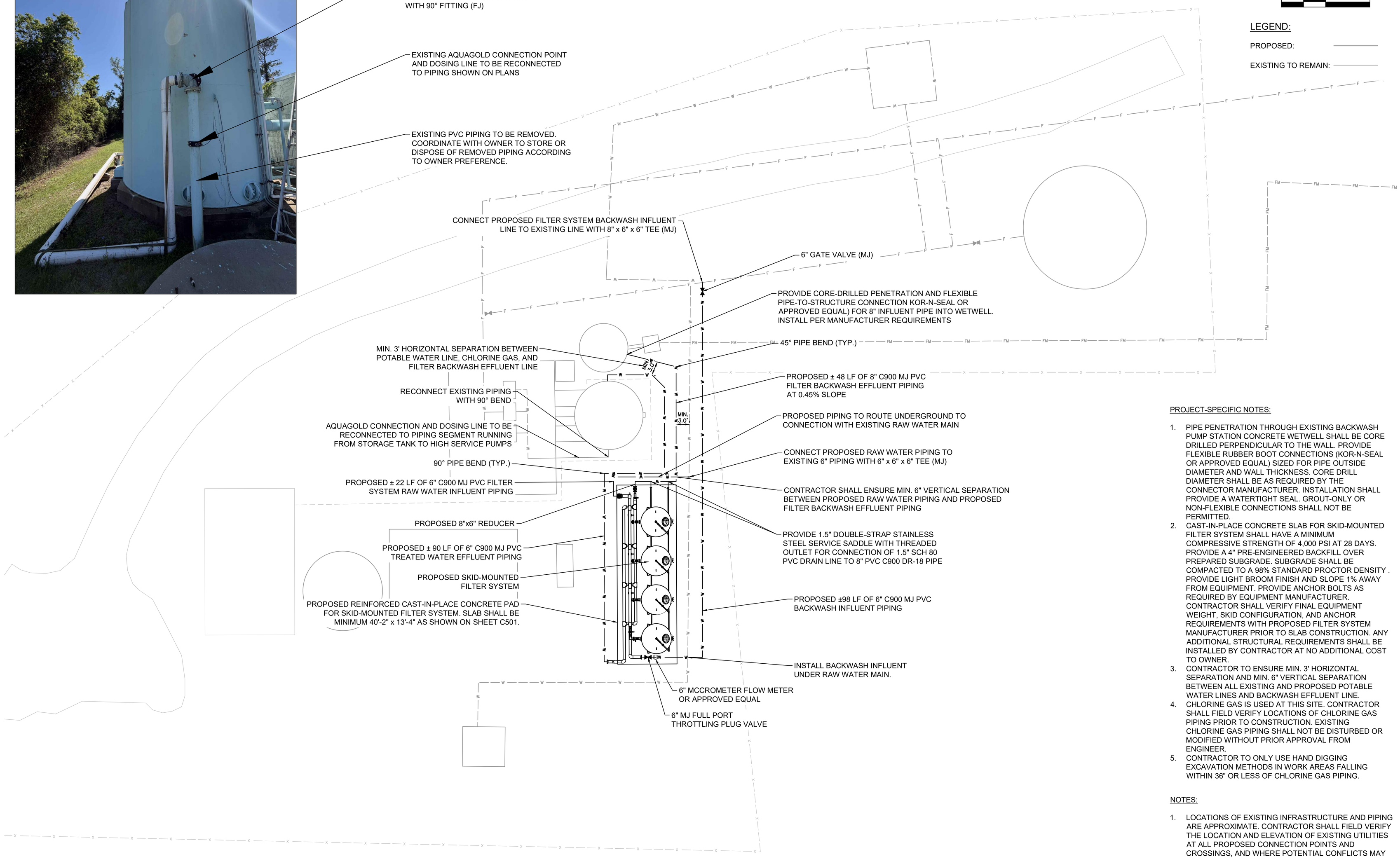

LEGEND:

PROPOSED:

EXISTING TO REMAIN:

PROJECT-SPECIFIC NOTES:

1. PIPE PENETRATION THROUGH EXISTING BACKWASH PUMP STATION CONCRETE WETWELL SHALL BE CORE DRILLED PERPENDICULAR TO THE WALL. PROVIDE FLEXIBLE RUBBER BOOT CONNECTIONS (KOR-N-SEAL OR APPROVED EQUAL) SIZED FOR PIPE OUTSIDE DIAMETER AND WALL THICKNESS. CORE DRILL DIAMETER SHALL BE AS REQUIRED BY THE CONNECTOR MANUFACTURER. INSTALLATION SHALL PROVIDE A WATERTIGHT SEAL. GROUT-ONLY OR NON-FLEXIBLE CONNECTIONS SHALL NOT BE PERMITTED.
2. CAST-IN-PLACE CONCRETE SLAB FOR SKID-MOUNTED FILTER SYSTEM SHALL HAVE A MINIMUM COMPRESSIVE STRENGTH OF 4,000 PSI AT 28 DAYS. PROVIDE A 4" PRE-ENGINEERED BACKFILL OVER PREPARED SUBGRADE. SUBGRADE SHALL BE COMPACTED TO A 98% STANDARD PROCTOR DENSITY . PROVIDE LIGHT BROOM FINISH AND SLOPE 1% AWAY FROM EQUIPMENT. PROVIDE ANCHOR BOLTS AS REQUIRED BY EQUIPMENT MANUFACTURER. CONTRACTOR SHALL VERIFY FINAL EQUIPMENT WEIGHT, SKID CONFIGURATION, AND ANCHOR REQUIREMENTS WITH PROPOSED FILTER SYSTEM MANUFACTURER PRIOR TO SLAB CONSTRUCTION. ANY ADDITIONAL STRUCTURAL REQUIREMENTS SHALL BE INSTALLED BY CONTRACTOR AT NO ADDITIONAL COST TO OWNER.
3. CONTRACTOR TO ENSURE MIN. 3' HORIZONTAL SEPARATION AND MIN. 6" VERTICAL SEPARATION BETWEEN ALL EXISTING AND PROPOSED POTABLE WATER LINES AND BACKWASH EFFLUENT LINE.
4. CHLORINE GAS IS USED AT THIS SITE. CONTRACTOR SHALL FIELD VERIFY LOCATIONS OF CHLORINE GAS PIPING PRIOR TO CONSTRUCTION. EXISTING CHLORINE GAS PIPING SHALL NOT BE DISTURBED OR MODIFIED WITHOUT PRIOR APPROVAL FROM ENGINEER.
5. CONTRACTOR TO ONLY USE HAND DIGGING EXCAVATION METHODS IN WORK AREAS FALLING WITHIN 36" OR LESS OF CHLORINE GAS PIPING.

NOTES:

1. LOCATIONS OF EXISTING INFRASTRUCTURE AND PIPING ARE APPROXIMATE. CONTRACTOR SHALL FIELD VERIFY THE LOCATION AND ELEVATION OF EXISTING UTILITIES AT ALL PROPOSED CONNECTION POINTS AND CROSSINGS, AND WHERE POTENTIAL CONFLICTS MAY OCCUR, PRIOR TO CONSTRUCTION.
2. NO UPGRADES TO EXISTING ELECTRICAL INFRASTRUCTURE IS ANTICIPATED AS PART OF THIS PROJECT.

No.	REVISIONS	DATE	BY

Kimley»Horn
© 2026 KIMLEY-HORN AND ASSOCIATES, INC.
2619 CENTENNIAL BLVD, SUITE 200, TALLAHASSEE, FL 32308
PHONE: 850-553-3500 FAX: 561-863-8175
WWW.KIMLEY-HORN.COM

LICENSED PROFESSIONAL

DATE:

KHA PROJECT 142840020
DATE MAY 2026
SCALE AS SHOWN
DESIGNED BY CLL
DRAWN BY ACS
CHECKED BY FJA

SITE PLAN

WATER PLANT UPGRADES
FUNDED BY FDACS PURE WATER, BRIGHT FUTURE
PREPARED FOR
TOWN OF GREENVILLE
GREENVILLE FLORIDA

SHEET NUMBER
C400

This document, together with the concepts and designs presented herein, as an instrument of service, is intended only for the specific purpose and client for which it was prepared. Reuse of and improper reliance on this document without written authorization and adaptation by Kimley-Horn and Associates, Inc. shall be without liability to Kimley-Horn and Associates, Inc.

Drawing Issued: K:\TAL_Utilities\20_Production\142840 - Town of Greenville\003 - Water Filter Replacement\Dwgs\CAD\Civil\Sheets\C400 - SITE PLAN.dwg SITE PLAN May 06, 2026 2:32pm by Alex.Scheel

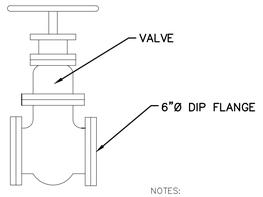

NOTES:

1. ISOLATION VALVES SHALL BE FULL PORT BALL VALVES OR RESILIENT SEAT GATE VALVES FACTORY ASSEMBLED WITH ASSEMBLY.

1 TYPICAL ABOVE-GROUND DUCTILE IRON GATE VALVE

N.T.S.

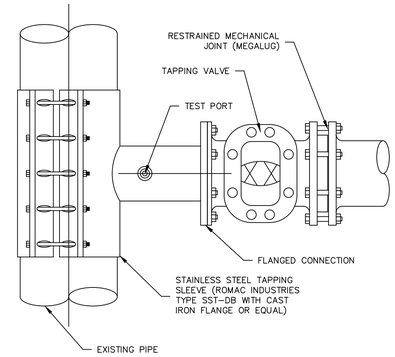

2 TAPPING SLEEVE AND VALVE

N.T.S.

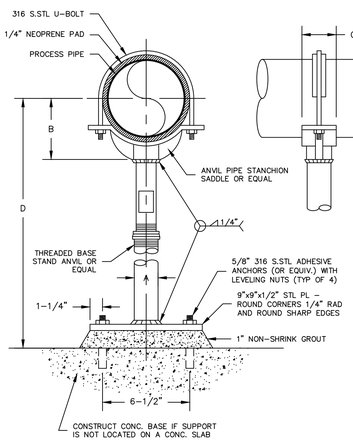

PIPE SIZE	A (NOM.)	B	C	D	
				MIN	MAX
4	3	4-3/16	3-5/8	6	60
5	3	4-13/16	3-5/8	6	60
6	3	5-7/16	3-5/8	8	60
8	3	6-15/16	3-5/8	8	60
10	3	8-7/16	3-5/8	10	60
12	3	9-15/16	3-5/8	12	60
14	3	10-1/2	6	6	60
16	3	11-1/2	6	8	60
18	4	13-1/2	6	8	60
20	4	14-1/2	6	10	60
24	4	17-1/2	6	12	60
26	4	18-1/2	6	6	60
30	4	20-5/8	6	8	60
32	4	21-5/8	6	8	60
36	4	23-5/8	6	10	60

* ALL DIMENSIONS IN INCHES

NOTES:

1. HOT-DIP GALVANIZE ENTIRE PIPE SUPPORT AFTER FABRICATION (EXCEPT FOR STAINLESS STEEL FASTENING HARDWARE), OR UNLESS OTHERWISE NOTED ON THE DRAWINGS AND SPECIFICATIONS.

2. SEE PLANS AND SECTIONS FOR PIPE GRADE REQUIREMENT.

3 PIPE SADDLE SUPPORT

N.T.S.

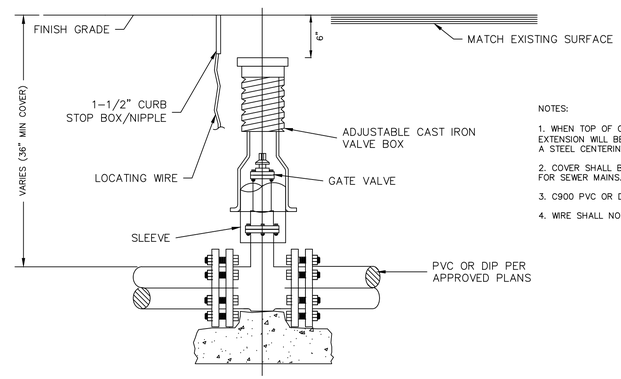

NOTES:

1. WHEN TOP OF OPERATING NUT IS DEEPER THAN 42", A HIGH STRENGTH STEEL EXTENSION WILL BE REQUIRED TO BRING OPERATING NUT 12" BELOW FINISHED GRADE. A STEEL CENTERING PLATE, WELDED TO THE EXTENSION, IS ALSO REQUIRED.

2. COVER SHALL BE PAINTED FEDERAL SAFETY BLUE FOR WATER MAINS AND GREEN FOR SEWER MAINS. BOLT DOWN COVER IN TRAFFIC AREAS.

3. C900 PVC OR DIP RISER PIPE SHALL BE ADDED TO EXTEND THE VALVE BOX.

4. WIRE SHALL NOT BE WRAPPED AROUND OPERATING NUT OR STEM FOR ANY REASON.

4 TYPICAL SUB-GRADE DUCTILE IRON GATE VALVE

N.T.S.

RESTRAINT LENGTH FOR HORIZONTAL BENDS (IN FEET)								
PIPE DIAMETER (INCHES)	DUCTILE IRON				PVC			
	BEND				BEND			
	11.25°	22.5°	45°	90°	11.25°	22.5°	45°	90°
4	2	4	8	18	3	5	9	22
6	3	5	11	25	3	6	13	30
8	4	7	14	33	4	8	17	39
10	4	8	16	39	5	10	20	47
12	5	9	19	46	6	11	23	55
14	6	11	22	52	7	13	26	62
16	6	12	24	58	7	14	29	69

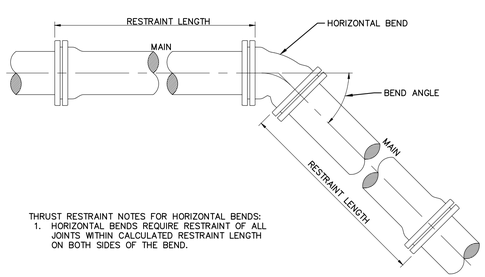

THRUST RESTRAINT NOTES FOR HORIZONTAL BENDS:
1. HORIZONTAL BENDS REQUIRE RESTRAINT OF ALL JOINTS WITHIN CALCULATED RESTRAINT LENGTH ON BOTH SIDES OF THE BEND.

5 RESTRAINT LENGTHS FOR HORIZONTAL BENDS

N.T.S.

RESTRAINT LENGTH FOR VERTICAL OFFSETS (IN FEET)												
PIPE DIAMETER (INCHES)	DUCTILE IRON						PVC					
	11.25°		22.5°		45°		11.25°		22.5°		45°	
	L_1	L_2	L_1	L_2	L_1	L_2	L_1	L_2	L_1	L_2	L_1	L_2
4	4	2	7	4	13	8	5	3	9	5	1	9
6	5	3	9	5	19	11	7	3	13	6	26	13
8	6	4	12	7	24	14	9	4	17	8	34	17
10	7	4	14	8	29	16	0	5	20	10	41	20
12	8	5	16	9	34	19	12	6	23	11	48	23
14	10	6	19	11	38	22	13	7	27	13	55	26
16	11	6	21	12	43	24	15	7	30	14	61	29

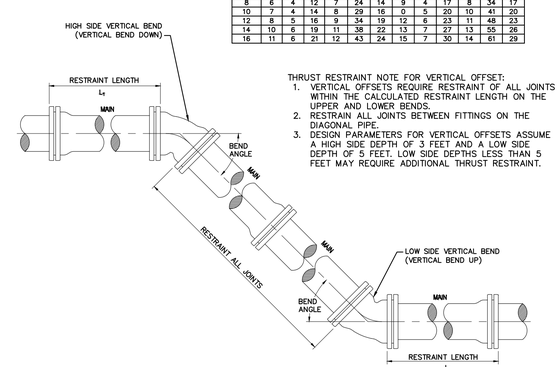

THRUST RESTRAINT NOTE FOR VERTICAL OFFSET:
1. VERTICAL OFFSETS REQUIRE RESTRAINT OF ALL JOINTS WITHIN THE CALCULATED RESTRAINT LENGTH ON THE UPPER AND LOWER BENDS.
2. RESTRAIN ALL JOINTS BETWEEN FITTINGS ON THE DIAGONAL PIPE.
3. DESIGN PARAMETERS FOR VERTICAL OFFSETS ASSUME A HIGH SIDE DEPTH OF 3 FEET AND A LOW SIDE DEPTH OF 5 FEET. LOW SIDE DEPTHS LESS THAN 5 FEET MAY REQUIRE ADDITIONAL THRUST RESTRAINT.

6 RESTRAINT LENGTHS FOR VERTICAL BENDS

N.T.S.

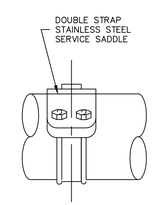

7 SERVICE SADDLE

N.T.S.

No.	REVISIONS	DATE	BY

Kimley»Horn
© 2026 KIMLEY-HORN AND ASSOCIATES, INC.
2619 CENTENNIAL BLVD, SUITE 200, TALLAHASSEE, FL 32308
PHONE: 850-553-3500 FAX: 561-863-8175
WWW.KIMLEY-HORN.COM

LICENSED PROFESSIONAL

DATE:

KHA PROJECT 142840020
DATE MAY 2026
SCALE AS SHOWN
DESIGNED BY CLL
DRAWN BY ACS
CHECKED BY FJA

CONSTRUCTION DETAILS (SHEET 1 OF 3)

WATER PLANT UPGRADES
FUNDED BY FDACS PURE WATER, BRIGHT FUTURE
PREPARED FOR
TOWN OF GREENVILLE
GREENVILLE FLORIDA

SHEET NUMBER
C500

This document, together with the concepts and designs presented herein, as an instrument of service, is intended only for the specific purpose and client for which it was prepared. Reuse of and improper reliance on this document without written authorization and adaptation by Kimley-Horn and Associates, Inc. shall be without liability to Kimley-Horn and Associates, Inc.

Drawing name: K:\TAL_Utilities\01_Projects\142840 - Town of Greenville\005 - Water Plant Improvement\Design\CAD\Plansheets\C005 - CONSTRUCTION DETAILS.dwg CONSTRUCTION DETAILS May 06, 2026 3:16pm by: Alex.Scheer

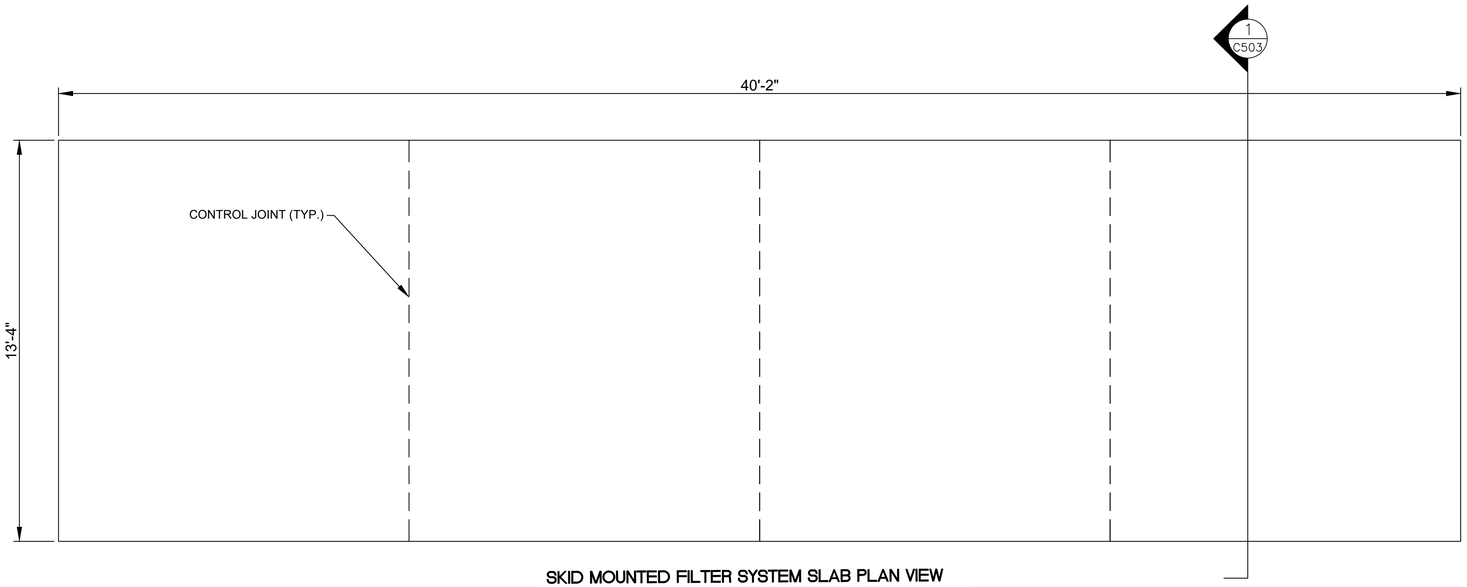

SKID MOUNTED FILTER SYSTEM SLAB PLAN VIEW

N.T.S.

(TRANSVERSE SECTION DETAILS SHOWN, LONGITUDINAL SECTION SIMILAR)

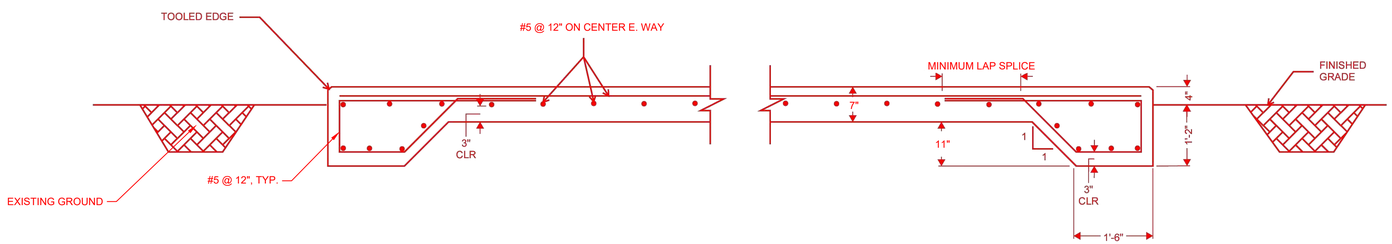

CONCRETE PAD

1 / C503 SKID MOUNTED FILTER SYSTEM SLAB SECTION VIEW

N.T.S.

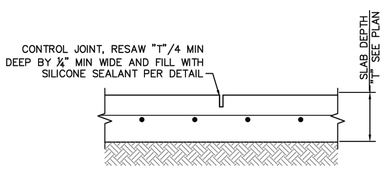

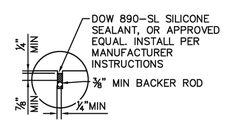

SILICONE SEALANT DETAIL

NOTES:
JOINT SHALL BE SAWED IMMEDIATELY AFTER INITIAL SET, BEFORE CONCRETE BEGINS TO COOL, AS SOON AS CONCRETE SURFACE IS FIRM ENOUGH NOT TO BE DAMAGED BY THE BLADE, AND BEFORE RANDOM DRYING SHRINKAGE CRACKS CAN FORM.

CONTROL JOINT DETAIL

N.T.S.

STRUCTURAL NOTES:

1.0 GENERAL NOTES:

1. UNLESS NOTED OTHERWISE (U.N.O.) ON DRAWINGS OR IN THE SPECIFICATIONS, THE FOLLOWING GENERAL STRUCTURAL NOTES SHALL APPLY TO THIS PROJECT.

2. THE GOVERNING CODE FOR THIS PROJECT IS THE 2023 FLORIDA BUILDING CODE, BUILDING, EIGHTH EDITION. THIS CODE PRESCRIBES WHICH EDITION OF EACH REFERENCED STANDARD APPLIES TO THIS PROJECT.

3. TO THE BEST OF OUR KNOWLEDGE, THE STRUCTURAL DRAWINGS AND SPECIFICATIONS COMPLY WITH THE APPLICABLE REQUIREMENTS OF THE GOVERNING BUILDING CODE.

4. CONSTRUCTION IS TO COMPLY WITH THE REQUIREMENTS OF THE GOVERNING BUILDING CODE AND ALL OTHER APPLICABLE FEDERAL, STATE, AND LOCAL CODES, STANDARDS, REGULATIONS AND LAWS.

5. IF ANY ERRORS OR OMISSIONS APPEAR ON THE DRAWINGS, SPECIFICATIONS, OR OTHER DOCUMENTS, THE CONTRACTOR SHALL NOTIFY THE OWNER IN WRITING OF SUCH OMISSIONS OR ERRORS PRIOR TO PROCEEDING WITH ANY WORK WHICH APPEARS IN QUESTION. IN THE EVENT OF THE CONTRACTOR'S FAILURE TO GIVE SUCH NOTICE, THE CONTRACTOR SHALL BE HELD RESPONSIBLE FOR THE RESULTS OF ANY SUCH ERRORS OR OMISSIONS AND THE COST OF RECTIFYING THE SAME.

6. CONTRACTORS WHO DISCOVER DISCREPANCIES, OMISSIONS OR VARIATIONS IN THE CONTRACT DOCUMENTS DURING BIDDING SHALL IMMEDIATELY NOTIFY THE OWNER. THE OWNER WILL RESOLVE THE CONDITION AND ISSUE A WRITTEN CLARIFICATION.

7. CONTRACTOR SHALL COORDINATE ALL EXISTING CONDITIONS DURING CONSTRUCTION OF THE PROJECT. UTILITY INFORMATION SHOWN ON THE PLANS MAY NOT BE COMPLETE OR ACCURATELY DEPICT THE LOCATION OF THE UTILITIES SHOWN. THE CONTRACTOR SHALL COORDINATE THE LOCATION OF ALL EXISTING, NEW, RELOCATED, AND ABANDONED UTILITIES WITH THE PROJECT PLANS AND NOTIFY RESPECTIVE OWNERS BEFORE COMMENCING THE WORK OF EXCAVATION. CONFLICTS SHALL BE BROUGHT TO THE ATTENTION OF THE OWNER AND RESOLVED PRIOR TO PROCEEDING WITH THE WORK.

8. THE CONTRACTOR SHALL COORDINATE ALL CONTRACT DOCUMENTS WITH FIELD CONDITIONS AND PROJECT SHOP DRAWINGS. VERIFY ALL DIMENSIONS, LOCATIONS, AND ELEVATIONS PRIOR TO STARTING CONSTRUCTION. DO NOT SCALE DRAWINGS; USE ONLY PRINTED DIMENSIONS. REPORT ANY DISCREPANCIES IN WRITING TO THE OWNER PRIOR TO PROCEEDING WITH WORK. DO NOT CHANGE SIZE OR LOCATION OF STRUCTURAL MEMBERS WITHOUT WRITTEN INSTRUCTIONS FROM THE STRUCTURAL ENGINEER OF RECORD.

9. THE CONTRACTOR SHALL PROTECT ADJACENT PROPERTY, HIS OWN WORK AND THE PUBLIC FROM HARM. THE CONTRACTOR IS SOLELY RESPONSIBLE FOR CONSTRUCTION MEANS AND METHODS, AND JOBSITE SAFETY INCLUDING ALL OSHA REQUIREMENTS.

10. THE SLAB ON GRADE IS DESIGNED TO BE STRUCTURALLY SOUND WHEN COMPLETED. PRIOR TO COMPLETION, THE CONTRACTOR IS RESPONSIBLE FOR STABILITY AND TEMPORARY BRACING.

11. DETAILS LABELED "TYPICAL" APPLY TO ALL SITUATIONS THAT ARE THE SAME OR SIMILAR TO THOSE SPECIFICALLY REFERENCED, WHETHER OR NOT THEY ARE KEYED IN AT EACH LOCATION. QUESTIONS REGARDING THE APPLICABILITY OF TYPICAL DETAILS SHALL BE RESOLVED BY THE CONTRACTOR.

2.0 DESIGN LOADS:

1. EQUIPMENT WEIGHT: DRY, NO MEDIA = 13,000 LBS
TOTAL WET WEIGHT = 85,000 LBS

GOVERNING CODE	FLORIDA BUILDING CODE, 8TH ED.
DESIGN WIND SPEED	[VULT= 130 MPH]
RISK CATEGORY	[III]
DIRECTIONALITY FACTOR	[KD = 0.85]
EXPOSURE	[C]

3.0 EXCAVATION, BACKFILL AND DEWATERING:

1. THE CONTRACTOR IS SOLELY RESPONSIBLE FOR ALL EXCAVATION PROCEDURES INCLUDING LAGGING, SHORING, AND PROTECTION OF ADJACENT PROPERTY, STRUCTURES, STREETS AND UTILITIES IN ACCORDANCE WITH THE REQUIREMENTS OF THE LOCAL BUILDING DEPARTMENT AND OSHA REGULATIONS. DO NOT EXCAVATE WITHIN ONE FOOT OF THE ANGLE OF REPOSE OF ANY SOIL BEARING FOUNDATION UNLESS THE FOUNDATION IS PROPERLY PROTECTED AGAINST SETTLEMENT.

2. THE CONTRACTOR IS RESPONSIBLE FOR THE DISPOSAL OF ALL ACCUMULATED WATER IN A MANNER THAT DOES NOT INCONVENIENCE OR DAMAGE THE WORK.

3. SLAB ON GRADE IS DESIGNED TO BEAR ON WELL COMPACTED FILL OR UNDISTURBED SOIL WITH A MINIMUM ALLOWABLE BEARING CAPACITY OF 2,000 PSF. PROVIDE A 4" PRE-ENGINEERED BACKFILL OVER PREPARED SUBGRADE. SUBGRADE SHALL BE COMPACTED TO A 98% STANDARD PROCTOR DENSITY. PROVIDE LIGHT BROOM FINISH AND SLOPE 1% AWAY FROM EQUIPMENT.

4. SUBGRADE PREPARATION SHALL BE FIELD CONTROLLED AND TESTED BY A LICENSED SOIL ENGINEER IN ACCORDANCE WITH THE PROJECT SPECIFICATIONS AND THESE NOTES. AT COMPLETION, THAT ENGINEER SHALL PREPARE AND SUBMIT TO THE OWNER A SIGNED AND SEALED LETTER INDICATING THAT THE GEOTECHNICAL RECOMMENDATIONS HAVE BEEN FOLLOWED.

4.0 REINFORCED CONCRETE SLAB ON GRADE:

1. COMPLY WITH ACI 301 AND ACI 318-25.

2. PROVIDE STRUCTURAL CONCRETE WITH A MINIMUM ULTIMATE COMPRESSIVE DESIGN STRENGTH OF 4,000 PSI IN 28 DAYS.

3. STRUCTURAL CONCRETE MIX TO BE IN ACCORDANCE WITH FDOT STANDARD SPECIFICATIONS SECTION 346.

4. PROVIDE ASTM A-615 GRADE 60 REINFORCING STEEL. REINFORCING SHALL BE ACCURATELY PLACED, RIGIDLY SUPPORTED AND FIRMLY TIED IN PLACE, WITH APPROPRIATE BAR SUPPORTS AND SPACERS. PROVIDE MINIMUM COVER OVER REINFORCING AS FOLLOWS:

ELEMENT	BOTTOM	TOP	SIDES
SLAB ON GRADE	3"	1 ½"	1 ½"

5. TENSION DEVELOPMENT LENGTH AND LAP SPLICE LENGTHS SHALL BE AS NOTED FOLLOWS:

BAR SIZE	MIN. LAP SPLICE
#5	28"

6. PROVIDE 3/4" CHAMFER OR TOOLED EDGE FOR ALL EXPOSED CORNERS.

7. PROVIDE CRACK CONTROL JOINTS AT 10 FEET MAXIMUM TO LIMIT AREAS BETWEEN JOINTS TO 144 SQ. FT. IN ALL SLABS ON GRADE. LOCATE TO CONFORM TO BAY SPACING WHENEVER POSSIBLE.

8. ANCHORAGE OR PROPOSED EQUIPMENT DESIGNED BY MANUFACTURER. CONTRACTORS SHALL VERIFY FINAL EQUIPMENT WEIGHT, SKID CONFIGURATION, AND ANCHOR REQUIREMENTS WITH PROPOSED FILTER SYSTEM MANUFACTURER PRIOR TO SLAB CONSTRUCTION. ANY ADDITIONAL STRUCTURAL REQUIREMENTS SHALL BE INSTALLED BY CONTRACTOR AT NO ADDITIONAL COST TO OWNER.

9. IF REINFORCEMENT IS ENCOUNTERED DURING DRILLING, ABANDON AND SHIFT THE HOLE LOCATION TO AVOID THE REINFORCEMENT. PROVIDE A MINIMUM OF 2 ANCHOR DIAMETERS OR 1 INCH, WHICHEVER IS LARGER, OF SOUND CONCRETE BETWEEN THE DOWEL AND THE ABANDONED HOLE. FILL THE ABANDONED HOLE WITH NON-SHRINK GROUT. IF THE ANCHOR OR DOWEL MAY NOT BE SHIFTED AS NOTED, THE ENGINEER WILL DETERMINE A NEW LOCATION.

No.	REVISIONS	DATE	BY

Kimley»Horn
© 2026 KIMLEY-HORN AND ASSOCIATES, INC.
2619 CENTENNIAL BLVD, SUITE 200, TALLAHASSEE, FL 32308
PHONE: 850-553-3500 FAX: 561-863-8175
WWW.KIMLEY-HORN.COM

LICENSED PROFESSIONAL

DATE:

KHA PROJECT 142840020
DATE MAY 2026
SCALE AS SHOWN
DESIGNED BY CLL
DRAWN BY ACS
CHECKED BY FJA

STRUCTURAL DETAILS

WATER PLANT UPGRADES
FUNDED BY FDACS PURE WATER, BRIGHT FUTURE
PREPARED FOR
TOWN OF GREENVILLE
GREENVILLE FLORIDA

SHEET NUMBER
C503

Drawing name: K:\TAL_Utilities\011_Greenville\142840 - Town of Greenville\005 - Water Plant Improvements\Design\CAD\Structural\C503 - CONSTRUCTION DETAILS.dwg STRUCTURAL DETAILS May 06, 2026 3:28pm by Alex.Scheer
This document, together with the concepts and designs presented herein, as an instrument of service, is intended only for the specific purpose and client for which it was prepared. Reuse of and improper reliance on this document without written authorization and adaptation by Kimley-Horn and Associates, Inc. shall be without liability to Kimley-Horn and Associates, Inc.

EXHIBIT C

Florida Department of Agriculture and Consumer Services
Division of Administration

WILTON SIMPSON
COMMISSIONER

NOTICE OF FEDERAL FINANCIAL ASSISTANCE FUNDING OPPORTUNITY REQUEST FOR APPLICATIONS

2 CFR Part 200

Funding Opportunity Number (DE-FOA-0000052 and DE-SEP-0002023)

I. Overview

Recipient: Florida Department of Agriculture and Consumer Services (FDACS)

Funding Opportunity Title: Florida Local Government Water and Wastewater Treatment Facility Energy Efficiency Program

Announcement Type: Request for Federal Financial Assistance Applications Initial Announcement

Funding Opportunity Number: DE-FOA-0000052 and DE-SEP-0002023

Assistance Listing Number (ALN): 81.041

Federal Agency Name: U.S. Department of Energy (USDOE)

II. Authority:

This program is authorized by the Energy Policy and Conservation Act, as amended (42 USC Subsection 6321); American Recovery and Reinvestment Act (ARRA) of 2009 (Public Law III-5); State Energy Program (SEP), 10 CFR 420; and Section 377.703 (2)(b), Florida Statutes. All awards made under this program shall comply with applicable laws and regulations including, but not limited to, 2 CFR Part 200 as amended by 2 CFR Part 910.

III. Federal Financial Assistance Funding Opportunity Description

In June 2020, the FDACS' Office of Energy (OOE) concluded a project entitled "Mapping the Energy Landscape of Water and Wastewater Treatment Plants in the State of Florida."[1] The broad objective of the project was to establish a baseline on energy efficiency and renewable energy measures and practices at water and wastewater treatment plants (WWTP) in Florida. The results of this project represent a tremendous opportunity for Florida WWTP to reduce energy use and reduce greenhouse gases (GHG) by installing energy efficient equipment and implementing conservation strategies. The information contained in "Mapping the Energy Landscape of Water and Wastewater Treatment Plants in the State of Florida" provides specific data and information on how

[1] The full report is available at https://ccmedia.fdacs.gov/content/download/93464/file/WWTP-Final-Report.pdf

WWTP can lower their energy use and therefore reduce operating costs by as much as 40 percent.

Based on the results of the above study, the FDACS OOE launched the Florida Wastewater Treatment Plant Energy Program in the summer of 2020. In addition to reducing energy use and greenhouse gas emissions, the FDACS OOE continued its efforts to achieve energy efficiency by investing in projects that aim to reduce energy burdens for Florida consumers. The Florida Wastewater Treatment Plant Energy Program considered factors that aimed to reduce the total energy consumption and the costs of wastewater treatment.

This Notice of Federal Financial Assistance Funding Opportunity (NOFFA) establishes a grant program to provide funding for energy efficiency improvement to water/wastewater treatment facilities. The state's proposed grant distribution strategy will utilize approximately $5 million in Federal SEP ($0.5 million) and SEP–ARRA ($4.5 million) funds. The grant funds will be made available based on total points assigned to each applicant. Applications are restricted to water and wastewater treatment facilities (WWTFs) owned and operated by designated fiscally constrained Florida counties as defined by Chapter 218.67(1), Florida Statutes, and the municipalities within those counties.

This program aims to assist eligible local governments with implementing projects and programs that will reduce the total energy consumption and costs of WWTPs within the state. Performance will be measured for each project according to the following metrics:

- Net annual energy saved at the facility (kWh/year);
- Energy saved per dollar funded (kWh/$);
- Amount of energy used to process one million gallons of wastewater (kWh/MG); and
- GHG reduction (CO2).

Energy baseline metrics must be provided during the pre-award site visit evaluation of the facility and one year after the conclusion of the project to verify the results of the project and the return on investment of dollars awarded. **These metrics must be tracked by the subrecipient for at least one year following completion of the project and reported to the Department.**

Awards will be granted based on total scores assigned to each applicant. FDACS OOE will prioritize and select the most impactful projects, ranked according to multiple factors, including, but not limited to, energy savings resulting from each award dollar funded (kWh/$), the energy rate paid by the facility, and the energy cost per million gallons of water treated.

IV. Eligibility Information

Eligible applications will come from publicly owned water and wastewater treatment facilities (WWTFs). These WWTFs must be owned and operated by local governments.

Applications will be restricted to designated fiscally constrained Florida counties and the municipalities within those counties as defined by Chapter 218.67(1), Florida Statutes.

Only <u>one</u> application is allowed per applicant. However, the applicant may propose multiple project activities and/or multiple project locations in the <u>one</u> application.

The scope of work must be performed within the State of Florida.

Eligible local governments receiving program funds are required to use the funds in a cost-effective manner to maximize benefits for the county population and in a manner that will yield sustained long-term impacts in terms of energy, emission reductions, and equitable workforce and community investment opportunities.

V. Allowable Activities

Under this Program, applicants will develop various initiatives and projects that address water/wastewater energy efficiency. Applicants are encouraged to use their program funds in a manner to maximize benefits for their population, in a manner that will leverage other sources of financing or funding and will yield maximum benefits over time in terms of energy and emission reductions. Eligible applicants are also encouraged to consider in its decisions the energy needs of each economic sector, including residential, industrial, commercial, agricultural, and governmental uses, and reduce those needs whenever possible.

Examples of eligible projects include, but are not limited to:

- Motors
- Belts
- Pumps
- Aerators
- Blowers
- Lighting
- Compressed air
- Occupancy sensors
- Disinfection systems
- Boilers
- CHP systems
- Biogas
- Insulation
- Heat recovery
- Photovoltaic systems
- Power generators
- Nutrient recovery
- Energy management systems

Up to ten percent (10%) of the total project cost may be used for administrative costs, including the cost of reporting requirements of the program.

VI. Key Dates

Action Item	Timeframe	Location
Notice of Federal Financial Assistance Funding Opportunity Advertisement	From 12/09/2024 To 02/07/2025	Posted electronically via FDACS Grant Opportunities
Submission of Questions	From 12/09/2024 To 01/13/2025	All questions must be submitted by email to Grants@FDACS.gov
Responses to Questions Posted	From 12/20/2024 To 01/13/2025	Posted to FDACS Grant Opportunities
Application Submission Deadline	02/07/2025 at 5:00 PM EST	Florida Local Government Water and Wastewater Treatment Facility Energy Efficiency Program
Evaluation of Applications	Anticipated From 02/10/2025 To 04/18/2025	Review and evaluation of applications begin.
Award Notice	Anticipated 05/09/2025	US mail on official FDACS letterhead
Pre-Award Site Visits	Anticipated 05/09/2025 To 06/06/2025	TBD
Subrecipient Agreement End Date	Anticipated 08/24/2027	Subrecipient Agreement

VII. Submission Dates, Times, and Location

The application deadline is Friday, February 7, 2025 at 5:00 P.M. Eastern Standard Time.

Hardcopy applications sent by U.S. Mail, courier, overnight or via hand delivery to the FDACS Purchasing Office must arrive no later than the submission deadline to:

Florida Department of Agriculture and Consumer Services
Attn: Water and Wastewater Treatment Facility Energy Efficiency Program Application
c/o Purchasing
407 South Calhoun Street, SB-8 Mayo Building
Tallahassee, Florida 32399-0800

Applications sent by U.S. Mail, courier, overnight or via hand delivery must include one original signed application packet and (3) copies of the application package.

Electronic applications will also be accepted. Applicants choosing to upload an electronic application need not submit a hard copy. Electronic applications can be uploaded to Florida Local Government Water and Wastewater Treatment Facility Energy Efficiency Program
It is the applicant's responsibility to ensure its submittal at the proper place and time indicated in this notice of federal financial assistance funding opportunity notice. No extensions. No exceptions.

VIII. Statutes and Regulations

Successful applicants must comply with State of Florida and Federal regulations as applicable to this program and described in this NOFFA.

FDACS is dedicated to ensuring Floridians have a sustainable, diverse, and reliable energy portfolio that benefits Florida's economy. All applicants shall adhere to the policy of the State of Florida, as stated in Section 377.601, Florida Statutes.

Section 377.601, Florida Statutes, states that:

- FDACS is responsible for performing or coordinating the functions of any federal energy programs delegated to the state, including energy supply, demand, conservation, or allocation.
- FDACS shall coordinate efforts to seek federal support or other support for state energy activities, including energy conservation, research, or development, and is responsible for the coordination of multiagency energy conservation programs and plans.
- FDACS shall promote energy efficiency and conservation in all energy use sectors throughout the state and be the state agency primarily responsible for this function.
- FDACS shall coordinate energy-related programs of state government. FDACS shall provide assistance to other state agencies, counties, municipalities, and regional planning agencies to further and promote their energy planning activities.
- FDACS shall promote the development and use of renewable energy resources, energy efficiency technologies, and conservation measures.

Grant activities funded under this NOTICE must meet the following conditions:

- Activities must be eligible under 42 U.S.C. Section 17154 regarding the use of federal funds.
- As defined in 40 U.S.C. 276a to a 7: When required by federal program legislation, all construction contracts awarded by the recipients and subrecipients of more than $2,000 shall include a provision for compliance with the Davis-Bacon Act (40 U.S.C. 276a to a-7) and as supplemented by Department of Labor regulations (29

CFR part 5, “Labor Standards Provisions Applicable to Contracts Governing Federally Financed and Assisted Construction”).

- Activities involving Public Buildings and Public Works are subject to the Buy American requirements for infrastructure projects.
- Activities that have limited potential to impact historic properties (any property 50 years or older and possessing “historical significance”) will require review in accordance with National Historic Preservation Act (NHPA) of 1966, Section 106, as amended.
- Activities must comply with the Florida Department of Financial Services, Reference Guide for State Expenditures at https://www.myfloridacfo.com/docs-sf/accounting-and-auditing-libraries/manuals/agencies/reference-guide-for-state-expenditures.pdf?sfvrsn=b4cc3337_6
- All activities must comply with the National Environmental Policy Act (NEPA) of 1969 – 42 U.S.C. Section 4321 et seq. Therefore, only projects and activities that USDOE has determined will be excluded from NEPA review through a Categorical Exclusion (CE or sometimes CX) will be deemed eligible projects by FDACS under this solicitation. Categorical Exclusion means a category of actions for which neither an Environmental Assessment (EA) nor an Environmental Impact Statement (EIS) is normally required. Bounded (CE) Categories:

Permitted Project Activities

All project activities funded by this grant program must be listed within the Bounded Categories, including restrictions. All projects must adhere to the requirements of the respective state’s Department of Energy executed Historic Preservation Programmatic Agreement, and are installed in existing buildings, or within the boundaries of a facility (defined as an already disturbed area due to regular ground maintenance), do not require structural reinforcement, no trees are removed, are appropriately sized.

1. Funding commercially available energy or energy/water efficiency or renewable energy upgrades are limited to projects that adhere to the requirements of the respective state’s Department of Energy executed Historic Preservation Programmatic Agreement; and are installed in existing buildings, or within the boundaries of a facility (defined as an already disturbed area due to regular ground maintenance), do not require structural reinforcement, no trees are removed, are appropriately sized, and are limited to:
   a. Installation of insulation.
   b. Installation of energy efficient lighting.
   c. HVAC upgrades (to existing systems).
   d. Weather sealing.
   e. Purchase and installation of energy efficient or energy/water efficient home and commercial appliances and equipment (including, but not limited to, energy or water monitoring and control systems, thermostats, furnaces, and air conditioners).

f. Retrofit of energy efficient pumps and motors, for such uses as (but not limited to) wastewater treatment plants, where it would not alter the capacity, use, mission, or operation of an existing facility.
g. Retrofit and replacement of windows and doors.
h. Installation of Combined Heat and Power System—systems sized appropriately for the buildings in which they are located, not to exceed peak electrical production at 300kW.
i. Battery Energy Storage System—not to exceed 1,000kWh capacity.

2. Development, implementation, and installation of onsite renewable energy technology from renewable resources are limited to projects that adhere to the requirements of the respective state's DOE executed Historic Preservation Programmatic Agreement, are installed in or on an existing structure or within the boundaries of a facility (defined as an already disturbed area due to regular ground maintenance), do not require structural reinforcement, no trees are removed, are appropriately sized, and limited to:

a. Solar Electricity/Photovoltaic—appropriately sized system or unit not to exceed 60 kW.
b. Wind Turbine—20 kW or smaller.
c. Solar Thermal (including solar thermal hot water)—system must be 200,000 BTU per hour or smaller.
d. Ground Source Heat Pump—5.5 tons of capacity or smaller, horizontal/vertical, ground, closed-loop system.
e. Biomass Thermal—3 MMBTUs per hour or smaller system with appropriate Best Available Control Technologies (BACT) installed and operated.

3. Installation of fueling pumps and systems for fuels such as compressed natural gas, hydrogen, ethanol, and other commercially available biofuels, (but not storage tanks) installed on the site of a current fueling station.
4. Purchase of alternative fuel vehicles.
5. Installation of electric vehicle supply equipment (EVSE), including testing measures to assess the safety and functionality of the EVSE. Installations are restricted to existing footprints and levels of previous ground disturbance, within an existing parking facility defined as any building, structure, land, right-of-way, facility, or area used for parking of motor vehicles. All activities must use reversible, non-permanent techniques for installation, where appropriate, use the lowest profile EVSE reasonably available that provides the necessary charging capacity; place the EVSE in a minimally visibly intrusive area; use colors complementary to surrounding environment, where possible, and are limited to the current electrical capacity. This applies to Level 1, Level 2, or Level 3 (also known as Direct Current (DC) Fast Charging) EVSE. Installation of EVSE on Tribal Lands, or installations of EVSE that may affect historic properties located on Tribal Lands, is excluded from this Bounded Category, without first contacting your DOE Project Officer who will coordinate with the DOE NEPA Specialist.

Prohibited Use of Funds

In accordance with federal regulations, applicants are prohibited from using financial assistance:

- For any casino or other gambling establishment, aquarium, zoos, golf course, or swimming pool.
- For any other activities prohibited by federal law.

Additionally, in accordance with federal regulations, applicants are prohibited from using SEP financial assistance:

- For construction, such as construction of mass transit systems and exclusive bus lanes or for the construction of buildings or structures;
- To purchase land, a building or structure or any interest therein.
- To subsidize fares for public transportation.
- To subsidize utility rate demonstrations or state tax credits for energy conservation or renewable energy measures.
- To conduct or purchase equipment to conduct research, development or demonstration of energy efficiency or renewable energy techniques and technologies not commercially available.
- For facilities that are federally owned or rented by the federal government (federal facilities are ineligible for assistance).
- For any other activities prohibited by federal law.
- To supplant weatherization activities under the Weatherization Assistance Program for Low-Income Persons, under 10 CFR part 440.

In accordance with Section 216.347, Florida Statutes, applicants are prohibited from using funds provided by this agreement for the purpose of lobbying the Legislature, the judicial branch, or any state agency.

IX. Award Information

Total amount of funding available	$5,000,000.00
Anticipated number of awards	6-20
Total Points assigned to receive an award	80
Maximum grant award to a single applicant	$750,000.00
Minimum grant award to a single applicant	$250,000.00
Period of Performance (Anticipated)	08/15/2025 through 08/15/2027

X. Definitions

For the purpose of this NOFFA, the following terms are defined:

Applicant: Entity that submits an application for federal financial assistance under this notice of funding opportunity.

Application Packet: Complete written response of the applicant to the notice of federal financial assistant funding opportunity including properly completed forms, supporting documents and attachments.

Assistance Listing Number: Formerly Catalog of Federal Domestic Assistance

Business hours: 8 a.m. to 5 p.m. eastern standard time on business days.

Business days: Monday through Friday, excluding federal and state holidays.

Calendar days: All days, including weekends and holidays.

Categorical Exclusion: a category of actions for which neither an Environmental Assessment (EA) nor an Environmental Impact Statement (EIS) is normally required.

CFR: Code of Federal Regulations.

Cost Reimbursement: A reimbursement payment to the grantee of reasonable costs previously expended in connection with the performance of work, not to exceed the amount set forth in the budget. See the Department of Financial Services, Reference Guide for State Expenditures.

Commissioner: Commissioner of Agriculture for the State of Florida.

Eligible Entity: Applicants to this program are restricted to Florida local governments.

Energy efficient measures: energy efficiency improvements that reduce energy consumption by replacing older, less efficient items with more energy efficient equipment.

FDACS: Florida Department of Agriculture and Consumer Services, an agency of the State of Florida.

Fiscally Constrained Counties: In accordance with Chapter 218.67(1), Florida Statues defines each county that is entirely within a rural area of opportunity as designated by the Governor pursuant to s. 288.0656 or each county for which the value of a mill will raise no more than $5 million in revenue, based on the taxable value certified pursuant to s. 1011.62(4)(a)1.a., from the previous July 1, shall be considered a fiscally constrained county.

Grant: See Subrecipient Agreement.

Grant Manager: An employee of FDACS, who is designated to be responsible for the monitoring and management of the subrecipient agreement.

Grantee: See Subrecipient.

Local Government: A county government or a municipality (an incorporated city, town, or village), excluding a school board district or an independent special district.

Recipient: The prime entity receiving federal financial assistance from a federal agency. In this NOTICE, recipient is interchangeable with FDACS.

Subrecipient: The entity (successful applicant) receiving federal financial assistance via the recipient. In this NOTICE, the term subrecipient is interchangeable with the term grantee.

Subrecipient Agreement: Formal agreement that will be awarded to the successful applicant under this notice of federal financial assistance funding opportunity.

Total Project Cost: The combined total of grant and match resources contributed to this project.

XI. Cost Sharing (Matching) Requirements

Cost Sharing (Matching) is not required for this federal financial assistance funding opportunity.

XII. Funding Source and/or Restrictions

Projects under this NOFFA will be funded, in whole, with funds appropriated by the American Recovery and Reinvestment Act (ARRA) of 2009 (Public Law III-5); and the State Energy Program (SEP).

FDACS reserves the right to award, or not award, subrecipient agreement(s) based on the availability of federal or state funds.

FDACS' obligation to pay under this subrecipient agreement is contingent upon funding by the federal agency or Florida Legislature.

Funding is available for project work initiated and completed during the award period.

Funding is subject to the amount of spending authority allocated by the Florida Legislature.

The allowability of costs shall be in accordance with the federal financial assistance cost principles applicable to the subrecipient.

XIII. Cost of Preparation

FDACS is not liable for any costs incurred by the applicant in response to the notice of federal financial assistance funding opportunity.

XIV. Public Records

Article 1, section 24, Florida Constitution, guarantees every person access to all public records, and Section 119.011, Florida Statutes, provides a broad definition of public record. As such, all responses to a federal financial assistance funding opportunity are public records unless exempt by law. Any applicant claiming that its response contains information that is exempt from the public records law shall clearly segregate and mark that information and provide the specific statutory citation for such exemption.

XV. Request Application Packet

The application packet is available online at FDACS Grant Opportunities

If you are unable to download the application packet, a written request for the application packet should be submitted to Grants@fdacs.gov

XVI. General Instructions for Application Packet

Carefully review all materials and prepare the responses accordingly.

The application packet must be complete and provide all the required information by the submission deadline to be considered. Application packets that fail to provide all the required forms and signatures will be considered non-responsive and consequently will be removed from the evaluation process.

Please ensure that all attachments reflect the applicant's name and funding opportunity number.

Unless otherwise noted, all hard copy application packets must be submitted on 8 ½" by 11" plain white paper. Pages must be consecutively numbered for ease of reading.

XVII. Application Package Components

FDACS forms must be used. Substitute forms will not be reviewed. Do not alter the pages unless the page indicates that it can be modified. Applications that do not include all required pages will be removed from the evaluation process.

A complete application package consists of the following pages (*update as applicable*):

- *Coversheet /Application for Federal Financial Assistance Subaward*
- *Key Contact Information*
- *Project Narrative*
- *Scope of Work*
- *Budget Plan Narrative*
- *Budget Plan*
- *Key Person/Staff*
- *Performance Site/Locations*
- *Assurances Subrecipient Award*
- *Certification Regarding Lobbying*
- *Certification Regarding Debarments, Suspension, Ineligibility*
- *Certification Statement*

XVIII. Clarifications/Revisions

Before award, FDACS reserves the right to seek clarifications or request any information deemed necessary for proper evaluation of submissions from all applicants deemed

eligible for the subrecipient agreement. Failure to provide requested information may result in rejection of the application.

XIX. Rejection of Applications

FDACS reserves the right to reject any and all applications or waive any minor irregularities when to do so would be in the best interest of the State of Florida, and to reject the proposal of an applicant whom FDACS determines is not in a position to perform the scope of work. Minor irregularities are those which will not have a significant or adverse effect on overall completion or performance.

XX. System for Award Management (SAM) Registration

The applicant must be registered in the System of Award Management (SAM) https://sam.gov/SAM/. The applicant will be required to maintain a registration for the duration of the award. Applicants who have an active exclusion may not be eligible for award. The applicant must obtain a Unique Entity Identifier (UEI). Any entity doing business with the federal government will need to use a UEI that is created in SAM. When applicants submit their applications, they will need to provide FDACS with their UEI.

XXI. Late Applications

Applications received by FDACS after the application submission deadline will be rejected as untimely.

XXII. Evaluation Criteria

An initial review of all applications will be completed and applications failing to submit all required information will be removed from consideration.

Each application will be evaluated and scored based on the criteria listed below.

a. Project Narrative: Up to 20 points will be awarded based upon the extent to which the project narrative demonstrates a clear understanding of the grant purpose and expected project outcomes. The applicant's project narrative score will be based upon the following criteria:
   - Did the applicant provide a statement as to the need for the federal financial assistance?
   - Did the applicant tie the need for assistance to the purpose of the grant?
   - Are the expected project outcomes related to the purpose of the grant?
   - Did the applicant provide details as to the implementation strategies?
   - Did the applicant provide a timeline which coincides with the award period?

b. Scope of Work: Up to 35 points will be awarded based upon the goals, measurable objectives, and activities presented in the scope of work. The application must include a clear and complete plan for the project. The applicant's scope of work score will be based upon the following criteria:
   - Does the applicant describe specific project objectives, tasks, and deliverables?

- Do the objectives and tasks relate to the project narrative?
- Is the timeline for each task reasonable?
- Did the applicant provide staff names indicating who is responsible for completing each task?
- Is the scope of work feasible for completion during the award period?

c. Budget Narrative: Up to 20 points will be awarded based upon the relationship between the scope of work and the itemized budget narrative. The application must demonstrate the need and reasonableness of the projected costs. The applicant's budget narrative score will be based upon the following criteria:
   - Did the applicant provide an itemized budget narrative?
   - Does the itemized budget narrative relate to the details in the scope of work?
   - Is each itemized budget line reasonable and necessary?
   - Does the budget plan tie to the budget narrative?
   - Is the budget adequate for the scope of the project?

d. Resources: Up to 15 points will be awarded based upon the applicant's staff qualifications and capacity of the applicant. The application must include the background and qualifications of key personnel to carry out the proposed scope of work. The application should demonstrate the adequacy of the applicant to support the project – facilities, equipment, supplies, etc. The applicant's resources score will be based upon the following criteria:
   - Did the applicant include the background and qualifications of key personnel?
   - Does it appear that the applicant has sufficient personnel assigned to complete the project on time?
   - Did the applicant list adequate resources to complete the project on time? Did the applicant indicate the project is ready to implement?

e. Performance: Up to 10 points will be awarded based upon the applicant's past performance on FDACS subrecipient agreements. New applicants that have never received an award from FDACS will receive these points automatically. The applicant's past performance score will be based upon the following criteria:
   - Did the applicant achieve the project plan as planned or were changes made to the original project plan?
   - Did the applicant submit timely and accurate reports?
   - Did the applicant have any unresolved programmatic or audit monitoring concerns?
   - Did the applicant expend the entire grant award?
   - Did the reimbursement request contain excessive unallowable costs or numerous corrections?

The scores for each factor will be added to obtain a total score for each application. Funding will be awarded to applications according to the total score received. FDACS reserves the right to recommend partial funding of applicantions.

XXIII. Evaluator(s)

FDACS' evaluation committee will consist of a minimum of three (3) and a maximum of five (5) individuals who FDACS will determine to have experience and knowledge in the program areas. The evaluator(s) will conduct a fair, impartial, and comprehensive evaluation of applications received in response to this notice of federal financial assistance funding opportunity.

XXIV. Anticipated Announcement and Award Dates

The evaluation and selection process are expected to be no longer than 45 days after the submission deadline. Successful and unsuccessful applicants will receive notification of their status through US mail on official FDACS letterhead.

XXV. Award Notice

Upon completion of FDACS' evaluation of applications, all applicants will be notified regarding their status.

It is anticipated that pre-award site visits will be conducted between 90 – 120 days after the initial NOFFA posting.

FDACS reserves the right to negotiate and/or adjust the final award amount and scope of work prior to award.

Successful applicants will have thirty (30) days to fully execute the Federal Financial Assistance Subrecipient Agreement (FDACS-02017). Failure by the subrecipient to sign and return the Subrecipient Agreement, within 30 days upon receipt of the agreement, shall constitute forfeiture of the award.

Although it is the intent of FDACS to expedite the subrecipient grant award process as much as possible, applicants should be aware that execution of a Subrecipient Agreement could be delayed for some time until federal funding is received. Projects should be scheduled accordingly. No costs to be charged against the subrecipient award or counted as match can be incurred before the Subrecipient Agreement is executed.

THIS IS NOT A COMPETITIVE SOLICITATION SUBJECT TO THE NOTICE OR CHALLENGE PROVISIONS OF SECTION 120.57(1) AND 120.57(3), FLORIDA STATUTES.

XXVI. Programmatic, Administrative, and National Policy Requirements

The applicant shall be in compliance with all laws, rules, and regulations applicable to the federal funds provided by the federal financial assistance funding opportunity.

The applicant shall maintain an accounting system and a set of accounting records which allow for the identification of revenues and expenditures related to this funding opportunity.

Projects must comply with applicable federal procurement regulations and state laws. The principal federal procurement regulation is contained in 2 CFR 200.320. Procurement of certain professional services is also subject to Section 287, Florida Statutes. **All projects**

requiring contractual services must be obtained through a new procurement; current and/or previous contracts will not be approved. Final determination of project eligibility will be made by the department.

XXVII. Acknowledgment of Funding

The subrecipient shall have an acknowledgement of the United States Department of Energy support placed on any publication written or published or audiovisual produced with grant support and, if feasible, on any publication reporting the results of, or describing, a grant-supported activity, or audiovisuals produced with grant support. This requirement does not apply to audiovisuals produced as research instruments or for documenting experimentations or findings and not intended for presentation or distribution to the public.

XXVIII. Performance Report

The applicant will submit a performance report monthly as required by the department using the format and content shown on the FDACS form which will be provided by the department.

XXIX. Reimbursement Requests

All reimbursement requests must be submitted using FDACS' standard payment request packet, unless otherwise noted in the special conditions of the subrecipient agreement and provide supporting documentation for each cost. The subrecipient shall submit the payment request packet to the recipient's grant manager not more often than monthly, but not less often than quarterly. To be eligible for reimbursement, costs shall be allowable, necessary, and reasonable, and must be submitted by budget category consistent with the budget plan submitted with applicant's application. The payment request packet is downloadable http://forms.fdacs.gov/02019.pdf.

Bills for any authorized travel expenses shall be submitted and paid in accordance with the rates specified in Section 112.061, Florida Statutes, governing payments by the State for travel expenses. Any travel expenses must be specified in the budget plan and scope of work.

The FDACS agreement with the federal agency is a cost reimbursement format; therefore, no advance payments will be provided.

Any work performed on the project and/or any expenditure made prior to a fully executed subrecipient agreement and written authorization from FDACS is ineligible for reimbursement.

XXX. Disclaimer

The receipt of applications in response to the notice of federal financial assistance funding opportunity does not imply or guarantee that any one or all qualified applicants will result in a subrecipient agreement with FDACS.

XXXI. Questions

Applicants shall address all questions regarding this federal financial assistance funding opportunity notice to the purchasing office. All questions submitted shall be published and answered in a manner that all applicants will be able to view.

All questions shall be directed to Grants@fdacs.gov

The Florida Department of Agriculture and Consumer Services offers its programs to all eligible persons regardless of race, color, national origin, religion, gender, age, disability, marital or veteran status, or any other legally protected status.

EXHIBIT D

Docusign Envelope ID: 7AF2B8CD-9BE3-47E2-9A99-36DE6662D933

Florida Department of Agriculture and Consumer Services
Division of Administration

WILTON SIMPSON
COMMISSIONER

ATTACHMENT G
FEDERAL FUNDING GRANTEE, SUBGRANTEE AND CONTRACTORS PROVISIONS

PURSUANT TO AMERICAN RECOVERY AND REINVESTMENT ACT UNITED STATES DEPARTMENT OF ENERGY AWARDS

All subgrants and contracts awarded by the Grantee, including small purchases, shall contain the following provisions as applicable:

1. **Equal Employment Opportunity** - All contracts shall contain a provision requiring compliance with E.O. 11246, "Equal Employment Opportunity," as amended by E.O. 11375, "Amending Executive Order 11246 Relating to Equal Employment Opportunity," and as supplemented by regulations at 41 CFR part 60, "Office of Federal Contract Compliance Programs, Equal Employment Opportunity, Department of Labor."

2. **Copeland "Anti-Kickback" Act (18 U.S.C. 874 and 40 U.S.C. 276c)** - All contracts and subgrants in excess of $2,000 for construction or repair awarded by recipients and subrecipients shall include a provision for compliance with the Copeland "Anti-Kickback" Act (18 U.S.C. 874), as supplemented by Department of Labor regulations (29 CFR part 3, "Contractors and Subcontractors on Public Building or Public Work Financed in Whole or in Part by Loans or Grants from the United States"). The Act provides that each contractor or subrecipient shall be prohibited from inducing, by any means, any person employed in the construction, completion, or repair of public work, to give up any part of the compensation to which he is otherwise entitled. The recipient shall report all suspected or reported violations to the Federal awarding agency.

3. **Davis-Bacon Act, as amended (40 U.S.C. 276a to a-7)** - When required by Federal program legislation, all construction contracts awarded by the recipients and subrecipients of more than $2,000 shall include a provision for compliance with the Davis-Bacon Act (40 U.S.C. 276a to a-7) and as supplemented by Department of Labor regulations (29 CFR part 5, "Labor Standards Provisions Applicable to Contracts Governing Federally Financed and Assisted Construction"). Under this Act, contractors shall be required to pay wages to laborers and mechanics at a rate not less than the minimum wages specified in a wage determination made by the Secretary of Labor. In addition, contractors shall be required to pay wages not less than once a week. The recipient shall place a copy of the current prevailing wage determination issued by the Department of Labor in each solicitation and the award of a contract shall be conditioned upon the acceptance of the wage determination. The recipient shall report all suspected or reported violations to the Federal awarding agency.

4. **Contract Work Hours and Safety Standards Act (40 U.S.C. 327-333)** - Where applicable, all contracts awarded by recipients in excess of $2000 for construction contracts and in excess of $2,500 for other contracts that involve the employment of mechanics or laborers shall include a provision for compliance with Sections 102 and 107 of the Contract Work Hours and Safety Standards Act (40 U.S.C. 327-333), as supplemented by Department of Labor regulations (29 CFR part 5). Under Section 102 of the Act, each contractor shall be required to compute the wages of every mechanic and laborer on the basis of a standard work week of 40 hours. Work in excess of the standard work week is permissible provided that the worker is compensated at a rate of not less than 1 ½ times the basic rate of pay for all hours worked in excess of 40 hours in the work week. Section 107 of the Act is applicable to construction work and provides that no laborer or mechanic shall be required to work in surroundings or under working conditions which are unsanitary, hazardous or dangerous. These requirements do not apply to the purchases of supplies or materials or articles ordinarily available on the open market, or contracts for transportation or transmission of intelligence.

5. **Rights to Inventions Made Under a Contract or Agreement** - Contracts or agreements for the performance of experimental, developmental, or research work shall provide for the rights of the Federal Government and the recipient in any resulting invention in accordance with 10 CFR part 600.325, "Rights to Inventions Made by Nonprofit Organizations and Small Business Firms Under Government Grants, Contracts and Cooperative Agreements," and any implementing regulations issued by the awarding agency.

6. **Clean Air Act (42 U.S.C. 7401 et seq.), and the Federal Water Pollution Control Act (33 U.S.C. 1251 et seq.), as amended** - Contracts and subgrants of amounts in excess of $100,000 shall contain a provision that requires the recipient to agree to comply with all applicable standards, orders or regulations issued pursuant to the Clean Air Act (42 U.S.C. 7401 et seq.) and the Federal Water Pollution Control Act as amended (33 U.S.C. 1251 et seq.). Violations shall be reported to the Federal awarding agency and the Regional Office of the Environmental Protection Agency (EPA).

7. **Byrd Anti-Lobbying Amendment (31 U.S.C. 1352)** - Contractors who apply or bid for an award of $100,000 or more shall file the required certification. Each tier certifies to the tier above that it will not and has not used Federal appropriated funds to pay any person or organization for influencing or attempting to influence an officer or employee of any agency, a member of Congress, officer or employee of Congress, or an employee of a member of Congress in connection with obtaining any Federal contract, grant or any other award covered by 31 U.S.C. 1352. Each tier shall also disclose any lobbying with non-Federal funds that takes place in connection with obtaining any Federal award. Such disclosures are forwarded from tier to tier up to the recipient.

8. **Debarment and Suspension (E.O.s 12549 and 12689)** - No contract shall be made to parties listed on the General Services Administration's List of Parties Excluded from Federal Procurement or Nonprocurement Programs in accordance with E.O.s 12549 and 12689, "Debarment and Suspension." This list contains the names of parties debarred, suspended, or otherwise excluded by agencies, and contractors declared ineligible under statutory or regulatory authority other than E.O. 12549. Contractors with awards that exceed the small purchase threshold shall provide the required certification regarding its exclusion status and that of its principal employees.

9. **Section 508 of the Federal Water Pollution Control Act, as amended (33 U.S.C. 1368) and Section 1424(e) of the Safe Drinking Water Act, (42 U.S.C. 300h-3(e))** - Contracts and subgrants of amounts in excess of $100,000 shall contain a provision that requires the recipient to agree to comply with all applicable standards, orders or regulations issued pursuant to Section 508 of the Federal Water Pollution Control Act, as amended (33 U.S.C. 1368) and Section 1424(e) of the Safe Drinking Water Act, (42 U.S.C. 300h-3(e)). Violations shall be reported to the Federal awarding agency and the Regional Office of the Environmental Protection Agency (EPA).

10. **Compliance with all Federal statutes relating to nondiscrimination.** These include but are not limited to: (a) Title VI of the Civil Rights Act of 1964 (P.L. 88-352) which prohibits discrimination on the basis of sex; (b) Section 504 of the Rehabilitation Act of 1973, as amended (29 U.S.C. 795), which prohibits discrimination on the basis of handicaps; (c) the Age Discrimination Act of 1975, as amended (42 U.S.C. 6101-6107), which prohibits discrimination on the basis of age; (d) the Drug Abuse Office and Treatment Act of 1972 (P.L. 92-255), as amended, relating to nondiscrimination on the basis of drug abuse; (e) the Comprehensive Alcohol Abuse and Alcoholism Prevention, Treatment and Rehabilitation Act of 1970 (P.L. 91-616), as amended, relating to nondiscrimination on the basis of alcohol abuse or alcoholism; (f) Sections 523 and 527 of the Public Health Service Act of 1912 (42 U.S.C. 290 dd-3 and 290 ee-3), as amended, relating to confidentiality of alcohol and drug abuse patient records; (g) Title VIII of the Civil Rights Act of 1968 (42 U.S.C. 3601 et seq.), as amended, relating to nondiscrimination in the sale, rental or financing of housing; (h) any other nondiscrimination provisions in the specific statute(s) made; and, (i) the requirements of any other nondiscrimination statute(s) which may apply.

11. **Compliance with the requirements of Titles II and III of the Uniform Relocation Assistance and Real Property Acquisition Policies Act of 1970 (P.L. 91-646)** which provide for fair and equitable treatment of persons displaced or whose property is acquired as a result of Federal or federally assisted programs. These requirements apply to all interests in real property acquired for project purposes regardless of Federal participation in purchases.

12. **Compliance with the provision of the Hatch Act (5 U.S.C. 1501 – 1508 and 7324 – 7328)** which limit the political activities of employees whose principal employment activities are funded in whole or in part with Federal funds.

13. **Comply, if applicable, with flood insurance purchase requirements of Section 102(a) of the Flood Disaster Protection Act of 1973 (P.L. 93-234)** which requires recipients in a special flood hazard area to participate in the program and to purchase flood insurance if the total cost of insurable construction and acquisition is $10,000 or more.

14. **Compliance with environmental standards which may be prescribed to the following:** (a) institution of environmental quality control measures under the National Environmental Policy Act of 1969 (P.L. 91-190) and Executive Order (EO) 11514; (b) notification of violating facilities pursuant to EP 11738; (c) protection of

wetlands pursuant to EO 11990; (d) evaluation of flood hazards in floodplain in accordance with EO 11988; (e) assurance of project consistency with the approved State management program developed under the Coastal Zone Management Act of 1972 (16 U.S.C. 1451 et seq.); (f) conformity of Federal actions to State (Clean Air) Implementation Plans under Section 176(c) of the Clean Air Act of 1955, as amended (42 U.S.C. 7401 et seq.); (g) protection of underground sources of drinking water under the Safe Drinking Water Act of 1974, as amended, (P.L. 93-523); and (h) protection of endangered species under the Endangered Species Act of 1973, as amended (P.L. 93-205).

15. **Compliance with the Wild and Scenic Rivers Act of 1968 (16 U.S.C. 1271 et seq.)** related to protecting components or potential components of the national wild and scenic rivers system.

16. **Compliance with Section 106 of the National Historic Preservation Act of 1966, as amended (16 U.S.C. 470), EO 11593 (identification and protection of historic properties), and the Archaeological and Historic Preservation Act of 1974 (16 U.S.C. 469a-1 et seq.)**

17. **Compliance with P.L. 93-348** regarding the protection of human subjects involved in research, development, and related activities supported by this award of assistance.

18. **Compliance with the Laboratory Animal Welfare Act of 1966 (P.L. 89-544, as amended, 7 U.S.C. 2131 et seq.)** pertaining to the care, handling, and treatment of warm bloodied animals held for research, teaching, or other activities supported by this Agreement.

19. **Compliance with the Lead-Based Paint Poisoning Prevention Act (42 U.S.C. 4801 et seq.)** which prohibits the use of lead based paint in construction or rehabilitation of residence structures.

20. **Compliance with the mandatory standards and policies relating to energy efficiency which are contained in the State energy conservation plan issued in accordance with the Energy Policy and Conservation Act (Pub. L. 94-163, 89 Stat. 871).**

21. **Assist the Department in complying with the State Energy Conservation Program as described in the Code of Federal Regulations, Title 10, Parts 420 and 450 and guidance issued by the U.S. Department of Energy and subsequent guidance issued by the U.S. Department of Energy; the Financial Assistance Rules described in Title 10, Part 600, as well as those regulations concerning the use of oil overcharge recovery funds.**

22. **The Department reserves the right to transfer equipment acquired under this grant as provided in Title 10, Part 600.117. The Recipient can obtain a release of this right upon application containing certain commitments.**

23. **Compliance with the Buy American Act (41 U.S.C. 10a-10c)** By accepting funds under this Agreement, the Grantee agrees to comply with sections 2 through 4 of the Act of March 3, 1933, popularly known as the "Buy American Act." The Grantee should review the provisions of the Act to ensure that expenditures made under this Agreement are in accordance with it. It is the sense of the Congress that, to the greatest extent practicable, all equipment and products purchased with funds made available under this Agreement should be American-made.

24. **Preservation of open and competition and government neutrality towards contractors' labor relations on federally funded construction projects**

a. Unless in conflict with State or local laws, you must ensure that bid specifications, project agreement, or other controlling documents in construction contracts awarded pursuant to this agreement, or pursuant to a subaward to this agreement, do not:

1. Require or prohibit bidders, offerors, contractors, or subcontractors to enter into or adhere to agreements with one or more labor organizations, on the same or other related construction project(s); or

2. Otherwise discriminate against bidders, offerors, contractors, or subcontractors for becoming or refusing to become or remain signatories or otherwise to adhere to agreements with one or more labor organizations, on the same or other related construction project(s).

b. The term "construction contract" as used in this provision means any contract for the construction, rehabilitation, alteration, conversion, extension, or repair of buildings, highways, or other improvements to real property.

c. Nothing in this provision prohibits bidders, offerors, contractors, or subcontractors from voluntarily entering into agreements with labor organizations.

Docusign Envelope ID: 7AF2B8CD-9BE3-47E2-9A99-36DE6662D933

25. **Compliance with the provision included in Title XV and Title XVI of Public Law 111-5, the American Recovery and Reinvestment Act of 2009.**

26. **Segregation of Costs –** Recipients must segregate the obligations and expenditures related to funding under the Recovery Act. Financial and accounting systems should be revised as necessary to segregate, track, and maintain these funds apart and separate from other revenue streams. No part of the funds from the Recovery Act shall be commingled with any other funds or used for a purpose other than that of making payments for costs allowable for Recovery Act projects.

27. **False Claims Act –** Recipient and sub-recipients shall promptly refer to the DOE or other appropriate Inspector General any credible evidence that a principle, employee, agent, contractor, sub-grantee, subcontractor, or other person has submitted a false claim under the False Claims Act or has committed a criminal or civil violation of laws pertaining to fraud, conflict of interest, bribery, gratuity or similar misconduct involving those funds.